瑞德科诺
RDEKONO

SUBRACK

Model Selection Manual for Subracks

BEIJING RDEKONO ELECTRONIC EQUIPMENT CO.,LTD

Responsibility and Innovation Connection and protection

Company Profile

瑞德科诺 RDEKONO

Beijing RdeKono Electronic Equipment

Beijing Rdekono Electronic Equipment co., Ltd

Beijing Rdekono Electronic Equipment Co., Ltd. was established in 2010 and is a national high-tech enterprise that integrates research and development, design, manufacturing, and services. The company has always been driven by technological innovation, deeply cultivating the field of electronic mechanical structures, strictly adhering to the ISO 22163 quality management system for the rail transit industry, and committed to providing customers with high-quality integrated solutions for complete machine systems.

Core layout and manufacturing strength

The company has established a strategic layout for the coordinated development of the Beijing Tianjin Hebei region:

Beijing headquarters: Gathering industry elite teams, building an innovative research and development center, leading technology research and product design;

HeBei Processing Center: Focusing on precision component manufacturing, laying a solid foundation for complete machine production with exquisite craftsmanship and strict quality control;

Tianjin Manufacturing Center: Relying on efficient and collaborative modern production lines, achieve lean and intelligent assembly and large-scale production of the entire machine.

Technical advantages and R&D philosophy

The company's R&D team is based on the whole machine engineering technology platform, integrating interdisciplinary technologies such as machinery, electronics, and materials, and deeply focusing on the full chain development of whole machine system integration. Form technical barriers in key areas such as availability design, structural optimization, thermal management, electromagnetic shielding, distribution systems, and reliability protection. Adhering to the core concept of 'facing user needs, manufacturing efficiency, and cost optimization", we ensure that our products accurately match the market and achieve the maximum balance between efficiency, quality, and commercial value.

One stop service empowers customers

From conceptual design, precision machining to mechatronics assembly, the company provides end-to-end full process services, deeply integrating innovative design and advanced manufacturing capabilities. By providing customized solutions to help customers shorten product launch cycles, optimize production costs, enhance core competitiveness, and create sustainable value for partners in fields such as rail transit and industrial electronics.

Mission Vision and Value Adherence

Corporate Mission: Integrating innovation, striving for excellence, and creating long-term value for customers with outstanding products;

Development Vision: To become a leading global supplier of electronic mechanical structural solutions,establish trust with quality, and achieve long-term success with service;

Core values: Achieve customer success, empower employees, share development, and build a mutually beneficial industrial ecosystem.

Company Qualification

瑞德科诺 RDEKONO

Beijing Rdekono Electronic Equipment Co., Ltd. has passed IRIS certification (IRIS Certification Rev. 04) and has successively obtained ISO 22163:2023 Quality Management System Certificate for Rail Transit Industry and ISO 9001:2015 Standard Certificate. Has the certification of National High tech Enterprise and Beijing Innovative Small and Medium sized Enterprise.

Company Qualification

瑞德科诺 RDEKONO

Beijing Rdekono Electronic Equipment Co, Ltd.has obtained 21 patent certificates, 17 utility model certifcates, and 4 design certficates from 2013to 2024.

证书号第21460205号

专利公告信息

实用新型专利证书

实用新型名称：一体化轻型侧板插箱

专利权人：北京瑞德科诺电子设备有限公司

地　　址：10000北京市海淀区温泉镇白家疃村870号

发 明 人：李晓峰 曹云玲、史航王军风 钟继霞 祝培琪

专 利 号：ZL 202323310671.1　　授权公告号：CN 221488059U

专利申请日：2023年12月06日　　授权公告日：2024年08月06日

申请日时申请人：北京瑞德科诺电子设备有限公司

申请日时发明人：李晓峰 曹云玲 史航 王军风 钟继度；祝培琪

国家知识产权局依照中华人民共和国专利法进行审查，决定授予专利权，并予以公告。
专利权自授权公告之日起生效。专利权有效性及专利权人变更等法律信息以专利登记　记载为准。

局长：
申长雨

第1页（共1页）

证书号第8806966号

专利公告信息

外观设计专利证书

外观设计名称：轨道交通电子设备机箱（一体化轻型侧板插箱）

专利权人：北永瑞德科诺电子设备有限公司

地　　址：10000北京市海淀区温泉镇白家疃村870号

设 计 人：李晓峰 曹云玲 史航王军风 钟继霞 祝培琪

专 利 号：ZL2023308015823　　授权公告号：CN 30782509S

专利申请日：2023年12月06日　　授权公告日：2024年08月13日

申请日时申请人：北京瑞德科诺电子设备有限公司

申请日时设计人：李晓峰 曹云玲 史航王军 风 钟继度 祝培琪

国家知识产权局依照中华人民共和国专利法进行审查，决定授予专利权，并予以公告。
专相权自授权公告之日如生故。合利权有效性及合利权人变更等法球位息双者利整记溶记板力准

局长
申长雨

第1页（共1页）

瑞德科诺 RDEKONO

Catalogue

CONTENTS

Catalogue
CONTENTS

瑞德科诺
RDEKONO

Standards/certifications

Inner and outer dimensions meet:IEC 60297-3-101, IEC 60297-3-102, IEC 60297-3-103, IEEE 1101.1 and IEEE 1101.10/11
Type of protection IP20 in accordance with IEC 60529
EMC testing to IEC 61587-3
Shock and vibration test reports:German "Bahn" standards BN 411002, BN 411003;NF F 60002, NF F 67012
IEC 61587-2, EN 50155, part 12.2.11

Customized service

Customize the side panel of the Subracks
Panel and panel opening, screen printing

EK&EG PRO Series Subracks introduction

EK&EG PRO series Subracks is a series of Subracks products developed by **RDEKONO** for the application of the 19" standard Subracks. After years of practical application shows that the EK&EGPRO series Subracks has stable performance, solid structure and meets all the requirements of the 19" standard size and application. At the same time, the EK&EGPRO series Subracks has the characteristics of high cost performance, rich components, flexible configuration and so on, which can meet the use requirements to the greatest extent

RDEKONO PRO 3/6U Subrack(Railway Applications)

- Unshielded and shielded versions NFF61005/60002
- Unshielded and shielded versions EN50155 subrack
- Shielded versions for CompactPCI applications

EK&EG PRO Series Subracks introduction

EK&EG PRO series Subracks is widely used in all kinds of standard electronic equipment and user-defined electronic systems, can be used to build CompactPCI,VME, VMEx64, PXI and other systems, can also be used as a general electronic plug-in box

瑞德科诺
RDEKONO

19 "Subrack Subracks

- Shock and vibration resistant to IEC 61587-2, EN 50155,NFF 67012/NF F 60002, Germanrailway standards BN 411002/411003
- IEC 60297-3-101, IEC 60297-3-102, IEC 60297-3-103, IEEE 1101.1 and IEEE 1101.10/11 compatible
- Designed for extractor handles to IEEE 1101.10/11 and IEC 60297-3-103 for CompactPCI and VME 64x application
- EMC shielding easily retrofittable if needed

RDEKONO PRO 3/6U Subrack(Kits)

- Unshielded and shielded versions
- Shielded versions for CompactPCI applications

EK&EG PRO Series Subracks Features

- **RDEKONO** 19"Subrack , manufactured by advanced technology
- EK&EG PRO series products meet the 19" standard, easy to assemble (Refer to the company's 19" standard summary manual for details). Fully reflected the standardization, module The characteristics and advantages of chemical and serialization
- All series of products adopt universal standard parts combination, reflecting a high degree of flexibility, customers can according to the specific needs of the general standard parts or customized product vibration, impact test standards: according to IEC61587-1, NE50155, BN411002,NF F67012, NF F67002 test
- Complies with IEEE 1101.1 standard
- Can be used to build CompactPCI.VME, VMEx64 system platform
- The Subracks have good electromagnetic shielding performance

EK PRO Economy Series Subracks

瑞德科诺 RDEKON

3U/4U

- Subrack Shielding case (CompactPCI) · Light beam,Can better reduce the weight, bearing performance unchanged
- Suitable for CompactPCI and VME64x insertion and extractor handles
- Rear horizontal rail for backplane mounting with insulation strip;For applications that install backplanes or connectors, Horizontal rails, rear, for connector mounting (IEC 60603-2 / DIN 41612)
- Typical shielding 40dB at 1 GHz,30 dB at 2GHz(as to VG 95373 ,part15),on condition zhat zhe front is sealed with shielded front panels
- For real I/O application

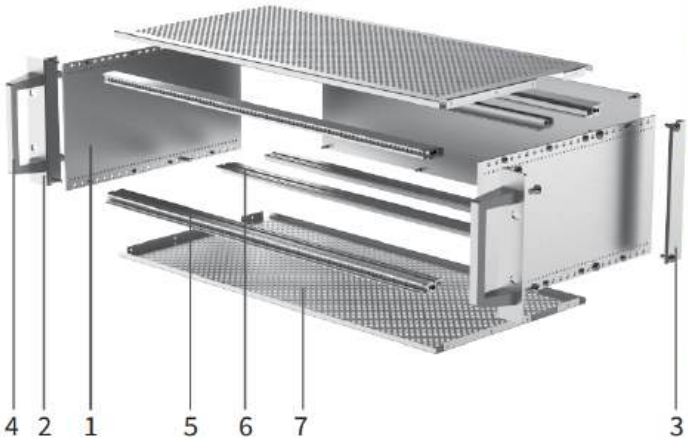

Delivery Comprises(kit)

Item	Name	Qty	Model
1	Side panel	2	/
2	Front bracket	2	/
3	Rear angle	2	/
4	Handle	2	choice
5	Front rails	4	/
6	Rear rails	2	/

Item	Name	Qty	Model
7	Cover plate	2	/
8	Threaded insert	6	/
9	Insulation strip	8	/
10	EMC gasket (Front rails)	4	choice
11	EMC gasket (Front bracket)	3	choice
12	EMC gasket (Cover plate)	4	choice

Order information

Height	Width	Depth	Model	Order no
3U	42TE	245	Perforated	1342-2451
3U	42TE	245	Without holes	1342-2450
3U	42TE	285	Perforated	1342-2851
3U	42TE	285	Without holes	1342-2850
3U	42TE	345	Perforated	1342-3451
3U	42TE	345	Without holes	1342-3450
3U	63TE	245	Perforated	1363-2451
3U	63TE	245	Without holes	1363-2450
3U	63TE	285	Perforated	1363-2851
3U	63TE	285	Without holes	1363-2850
3U	63TE	345	Perforated	1363-3451
3U	63TE	345	Without holes	1363-3450
3U	84TE	245	Perforated	1384-2451
3U	84TE	245	Without holes	1384-2450
3U	84TE	285	Perforated	1384-2851
3U	84TE	285	Without holes	1384-2850
3U	84TE	345	Perforated	1384-3451
3U	84TE	345	Without holes	1384-3450

Height	Width	Depth	Model	Material No
4U	42TE	245	Perforated	1442-2451
4U	42TE	245	Without holes	1442-2450
4U	42TE	285	Perforated	1442-2851
4U	42TE	285	Without holes	1442-2850
4U	42TE	345	Perforated	1442-3451
4U	42TE	345	Without holes	1442-3450
4U	63TE	245	Perforated	1463-2451
4U	63TE	245	Without holes	1463-2450
4U	63TE	285	Perforated	1463-2851
4U	63TE	285	Without holes	1463-2850
4U	63TE	345	Perforated	1463-3451
4U	63TE	345	Without holes	1463-3450
4U	84TE	245	Perforated	1484-2451
4U	84TE	245	Without holes	1484-2450
4U	84TE	285	Perforated	1484-2851
4U	84TE	285	Without holes	1484-2850
4U	84TE	345	Perforated	1484-3451
4U	84TE	345	Without holes	1484-3450

EK PRO Economy Series Subracks

瑞德科诺 RDEKON

6U

- Subrack Shielding case (CompactPCI) · Light beam,Can better reduce the weight, bearing performance unchanged
- Suitable for CompactPCI and VME64x insertion and extractor handles
- Rear horizontal rail for backplane mounting with insulation strip;For applications that install backplanes or connectors, Horizontal rails, rear, for connector mounting (IEC 60603-2 / DIN 41612)
- Typical shielding 40dB at 1 GHz,30 dB at 2GHz(as to VG 95373 ,part15),on condition zhat zhe front is sealed with shielded front panels
- For real I/O application

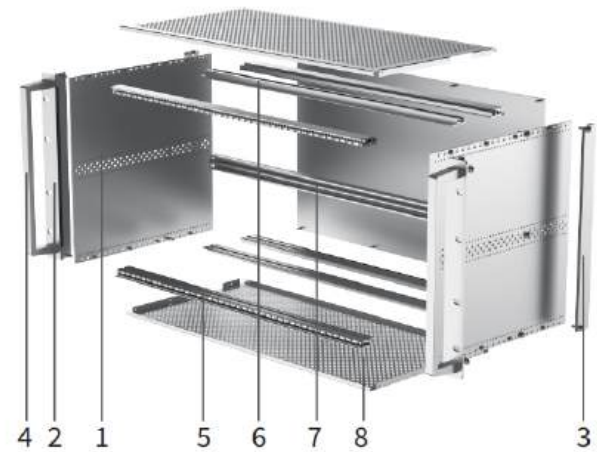

Delivery Comprises(kit)

Item	Name	Qty	Model
1	Side panel	2	/
2	Front bracket	2	/
3	Rear angle	2	/
4	Handle	2	choice
5	Front rails	4	/
6	Rear rails	2	/
7	Middle rails	1	/

Item	Name	Qty	Model
8	Cover plate	2	/
9	Threaded insert	8	/
10	Insulation strip	16	/
11	EMC gasket (Front rails)	4	choice
12	EMC gasket (Front bracket)	3	choice
13	EMC gasket (Cover plate)	4	choice

Order information

Height	Width	Depth	Model	Material No
6U	42TE	245	Perforated	1642-2451
6U	42TE	245	Without holes	1642-2450
6U	42TE	285	Perforated	1642-2851
6U	42TE	285	Without holes	1642-2850
6U	42TE	345	Perforated	1642-3451
6U	42TE	345	Without holes	1642-3450
6U	63TE	245	Perforated	1663-2451
6U	63TE	245	Without holes	1663-2450
6U	63TE	285	Perforated	1663-2851
6U	63TE	285	Without holes	1663-2850
6U	63TE	345	Perforated	1663-3451
6U	63TE	345	Without holes	1663-3450
6U	84TE	245	Perforated	1684-2451
6U	84TE	245	Without holes	1684-2450
6U	84TE	285	Perforated	1684-2851
6U	84TE	285	Without holes	1684-2850
6U	84TE	345	Perforated	1684-3451
6U	84TE	345	Without holes	1684-3450

EG PRO Rugged Series Subracks

瑞德科诺 RDEKON

3U/4U

- Subrack Shielding case (CompactPCI) · Heavy beam, Provide better load-bearing performance
- Suitable for CompactPCI and VME64x insertion and extractor handles
- Rear horizontal rail for backplane mounting with insulation strip;For applications that install backplanes or connectors, Horizontal rails, rear, for connector mounting (IEC 60603-2 / DIN 41612)
- Typical shielding 40dB at 1 GHz,30 dB at 2GHz(as to VG 95373 ,part15),on condition zhat zhe front is sealed with shielded front panels
- For real I/O application

Delivery Comprises(kit)

Item	Name	Qty	Model
1	Side panel	2	/
2	Front bracket	2	/
3	Rear angle	2	/
4	Handle	2	Choice
5	Front rails	4	/
6	Rear rails	2	/

Item	Name	Qty	Model
7	Cover plate	2	/
8	Threaded insert	6	/
9	Insulation strip	8	/
10	EMC gasket (Front rails)	4	Choice
11	EMC gasket (Front bracket)	3	Choice

Order information

Height	Width	Depth	Model	Order no
3U	42TE	245	Perforated	2342-2451
3U	42TE	245	Without holes	2342-2450
3U	42TE	285	Perforated	2342-2851
3U	42TE	285	Without holes	2342-2850
3U	42TE	345	Perforated	2342-3451
3U	42TE	345	Without holes	2342-3450
3U	63TE	245	Perforated	2363-2451
3U	63TE	245	Without holes	2363-2450
3U	63TE	285	Perforated	2363-2851
3U	63TE	285	Without holes	2363-2850
3U	63TE	345	Perforated	2363-3451
3U	63TE	345	Without holes	2363-3450
3U	84TE	245	Perforated	2384-2451
3U	84TE	245	Without holes	2384-2450
3U	84TE	285	Perforated	2384-2851
3U	84TE	285	Without holes	2384-2850
3U	84TE	345	Perforated	2384-3451
3U	84TE	345	Without holes	2384-3450

Height	Width	Depth	Model	Material No
4U	42TE	245	Perforated	2442-2451
4U	42TE	245	Without holes	2442-2450
4U	42TE	285	Perforated	2442-2851
4U	42TE	285	Without holes	2442-2850
4U	42TE	345	Perforated	2442-3451
4U	42TE	345	Without holes	2442-3450
4U	63TE	245	Perforated	2463-2451
4U	63TE	245	Without holes	2463-2450
4U	63TE	285	Perforated	2463-2851
4U	63TE	285	Without holes	2463-2850
4U	63TE	345	Perforated	2463-3451
4U	63TE	345	Without holes	2463-3450
4U	84TE	245	Perforated	2484-2451
4U	84TE	245	Without holes	2484-2450
4U	84TE	285	Perforated	2484-2851
4U	84TE	285	Without holes	2484-2850
4U	84TE	345	Perforated	2484-3451
4U	84TE	345	Without holes	2484-3450

EG PRO Rugged Series Subracks

瑞德科诺 RDEKON

6U

- Subrack Shielding case (CompactPCI) · Heavy beam, Provide better load-bearing performance
- Suitable for CompactPCI and VME64x insertion and extractor handles
- Rear horizontal rail for backplane mounting with insulation strip;For applications that install backplanes or connectors, Horizontal rails, rear, for connector mounting (IEC 60603-2 / DIN 41612)
- Typical shielding 40dB at 1 GHz,30 dB at 2GHz(as to VG 95373 ,part15),on condition zhat zhe front is sealed with shielded front panels
- For real I/O application

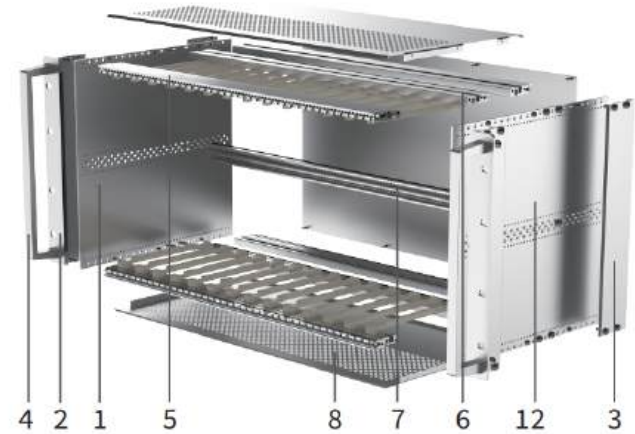

Delivery Comprises(kit)

Item	Name	Qty	Model
1	Side panel	2	/
2	Front bracket	2	/
3	Rear angle	2	/
4	Handle	2	choice
5	Front rails	4	/
6	Rear rails	2	/
7	Middle rails	1	/

Item	Name	Qty	Model
8	Cover plate	2	/
9	Threaded insert	8	/
10	Insulation strip	16	/
11	EMC gasket (Front rails)	4	choice
12	EMC gasket (Front bracket)	3	choice

Order information

Height	Width	Depth	Model	Material No
6U	42TE	245	Perforated	2642-2451
6U	42TE	245	Without holes	2642-2450
6U	42TE	285	Perforated	2642-2851
6U	42TE	285	Without holes	2642-2850
6U	42TE	345	Perforated	2642-3451
6U	42TE	345	Without holes	2642-3450
6U	63TE	245	Perforated	2663-2451
6U	63TE	245	Without holes	2663-2450
6U	63TE	285	Perforated	2663-2851
6U	63TE	285	Without holes	2663-2850
6U	63TE	345	Perforated	2663-3451
6U	63TE	345	Without holes	2663-3450
6U	84TE	245	Perforated	2684-2451
6U	84TE	245	Without holes	2684-2450
6U	84TE	285	Perforated	2684-2851
6U	84TE	285	Without holes	2684-2850
6U	84TE	345	Perforated	2684-3451
6U	84TE	345	Without holes	2684-3450

EG PRO Rugged Series Subracks

瑞德科诺 RDEKON

3U/4U

- Subrack Shielding case (CompactPCI) · Heavy beam,Provide better load-bearing performance
- Suitable for CompactPCI and VME64x insertion and extractor handles
- Rear horizontal rail for backplane mounting with insulation strip;For applications that install backplanes or connectors, Horizontal rails, rear, for connector mounting (IEC 60603-2 / DIN 41612)
- Typical shielding 40dB at 1 GHz,30 dB at 2GHz(as to VG 95373 ,part15),on condition zhat zhe front is sealed with shielded front panels
- For real I/O application

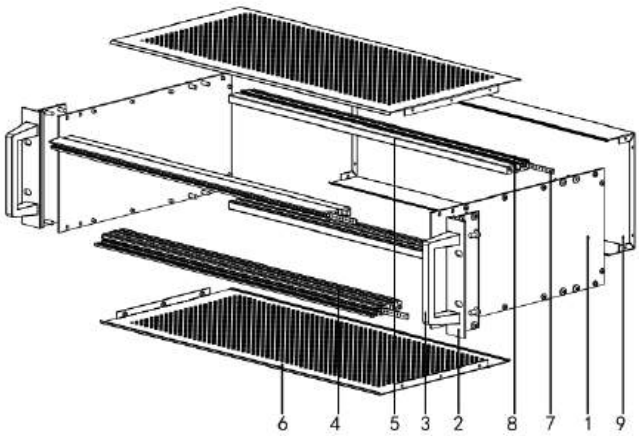

Delivery Comprises(kit)

Item	Name	Qty	Model
1	Side panel	2	/
2	Front bracket	2	/
3	Handle	2	Choice
4	Front rails	2	/
5	Rear rails	2	/
6	Cover plate	2	/

Item	Name	Qty	Model
7	Threaded insert	4	/
8	Insulation strip	8	/
9	Bent back panel	1	/
10	EMC gasket (Front rails)	4	Choice
11	EMC gasket (Front bracket)	3	Choice

Order information

Height	Width	Depth	Model	Order no
3U	42TE	245	Perforated	2342-24514
3U	42TE	245	Without holes	2342-24504
3U	42TE	285	Perforated	2342-28514
3U	42TE	285	Without holes	2342-28504
3U	42TE	345	Perforated	2342-34514
3U	42TE	345	Without holes	2342-34504
3U	63TE	245	Perforated	2363-24514
3U	63TE	245	Without holes	2363-24504
3U	63TE	285	Perforated	2363-28514
3U	63TE	285	Without holes	2363-28504
3U	63TE	345	Perforated	2363-34514
3U	63TE	345	Without holes	2363-34504
3U	84TE	245	Perforated	2384-24514
3U	84TE	245	Without holes	2384-24504
3U	84TE	285	Perforated	2384-28514
3U	84TE	285	Without holes	2384-28504
3U	84TE	345	Perforated	2384-34514
3U	84TE	345	Without holes	2384-34504

Height	Width	Depth	Model	Order no
4U	42TE	245	Perforated	2442-24514
4U	42TE	245	Without holes	2442-24504
4U	42TE	285	Perforated	2442-28514
4U	42TE	285	Without holes	2442-28504
4U	42TE	345	Perforated	2442-34514
4U	42TE	345	Without holes	2442-34504
4U	63TE	245	Perforated	2463-24514
4U	63TE	245	Without holes	2463-24504
4U	63TE	285	Perforated	2463-28514
4U	63TE	285	Without holes	2463-28504
4U	63TE	345	Perforated	2463-34514
4U	63TE	345	Without holes	2463-34504
4U	84TE	245	Perforated	2484-24514
4U	84TE	245	Without holes	2484-24504
4U	84TE	285	Perforated	2484-28514
4U	84TE	285	Without holes	2484-28504
4U	84TE	345	Perforated	2484-34514
4U	84TE	345	Without holes	2484-34504

EG PRO Rugged Series Subracks

瑞德科诺 RDEKON

6U

- Subrack Shielding case (CompactPCI) · Heavy beam,Provide better load-bearing performance
- Suitable for CompactPCI and VME64x insertion and extractor handles
- Rear horizontal rail for backplane mounting with insulation strip;For applications that install backplanes or connectors, Horizontal rails, rear, for connector mounting (IEC 60603-2 / DIN 41612)
- Typical shielding 40dB at 1 GHz,30 dB at 2GHz(as to VG 95373 ,part15),on condition zhat zhe front is sealed with shielded front panels
- For real I/O application

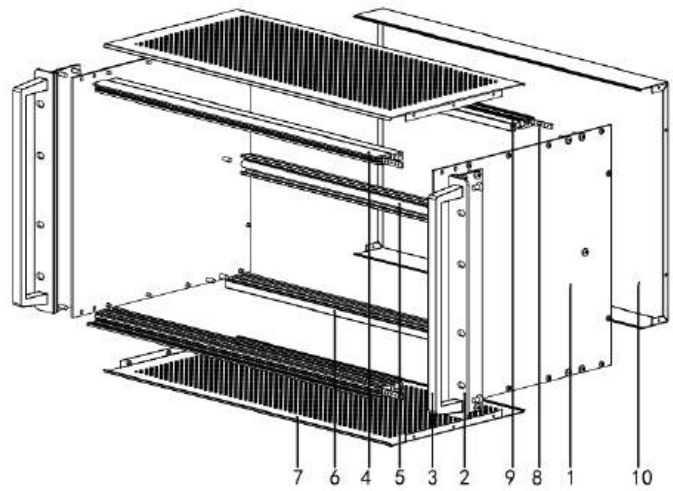

Delivery Comprises(kit)

Item	Name	Qty	Model
1	Side panel	2	/
2	Front bracket	2	/
3	Handle	2	Choice
4	Front rails	2	/
5	Middle rails	1	/
6	Rear rails	2	/
7	Cover plate	2	/

Item	Name	Qty	Model
8	Threaded insert	6	/
9	Insulation strip	16	/
10	Bent back panel	1	/
11	EMC gasket (Front rails)	4	Choice
12	EMC gasket (Front bracket)	3	Choice

Order information

Height	Width	Depth	Model	Material No
6U	42TE	245	Perforated	2642-24514
6U	42TE	245	Without holes	2642-24504
6U	42TE	285	Perforated	2642-28514
6U	42TE	285	Without holes	2642-28504
6U	42TE	345	Perforated	2642-34514
6U	42TE	345	Without holes	2642-34504
6U	63TE	245	Perforated	2663-24514
6U	63TE	245	Without holes	2663-24504
6U	63TE	285	Perforated	2663-28514
6U	63TE	285	Without holes	2663-28504
6U	63TE	345	Perforated	2663-34514
6U	63TE	345	Without holes	2663-34504
6U	84TE	245	Perforated	2684-24514
6U	84TE	245	Without holes	2684-24504
6U	84TE	285	Perforated	2684-28514
6U	84TE	285	Without holes	2684-28504
6U	84TE	345	Perforated	2684-34514
6U	84TE	345	Without holes	2684-34504

Front horizontal Rail

Order information

Heavy Type EG Short Lip-Rugged

Compliant with IEC60297 standard for PCB rail installation and panel fixation

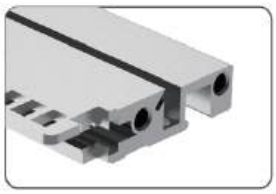

EG-Long Lip

For CompactPCL , VME64× systems

Lighit Type-EK Short Lip

Compliant with IEC60297 standard for PCB rail installation and panel fixation

EK-Long Lip

Compliant with IEEE 1101.10 standard, Used in conjunction with the panel for installing the CPCI puller, Used for the installation of PCB rails

Model	Order no	Order no	Order no	Order no
42TE	0100003	0140010	0110003	0140003
63TE	0100005	0140012	0110005	0140005
84TE	0100006	0140013	0110006	0140006
104TE	0100007	0140014	0110007	0140007
Cross Rails setting screw M4×12	1004057			

EK&EG Series Subracks Rear horizontal Rail

瑞德科诺 RDEKON

Rear horizontal Rail

Order information

Heavy Type-EG
Use for install backplane

Heavy Type-EG-II
Use for install backplane

Light Type-EK
Use for install backplane

Light Type-EK-II
Use for install backplane

Model	Order no	Order no	Order no	Order no
42TE	0100010	0100023	0110010	0110043
63TE	0100012	0100026	0110012	0110045
84TE	0100013	0100015	0110013	0110022
104TE	0100014	0100016	0110014	0110044

Light Type EK with Z-rail
Used for installing connectors that comply with EN60603-3 and DIN60297

Light Type EK with Threaded insert
Use for install backplane

Model	Order no	Order no
42TE	0120010	01100042
63TE	0120012	01100063
84TE	0120013	01100084
104TE	0120014	011000104

EK&EG Series Subracks Middle rails

瑞德科诺 RDEKON

Middle Rail

Order information

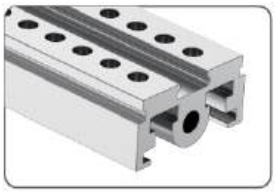

Light Type-EK Middle Rail

For indirest mounting of backplanes viainsulatin strip,order insulatinstrip separately

Light Type-EK transfer Middle Rail

Used for installation of PCB guide rails and coordination with center beams

Light Type EK-Z Middle Rail

Used for installing connectors that comply with EN60603-3 and DIN60297

Model	Order no	Order no	Order no
42TE	0150042	0150010	0120017
63TE	0150063	0150012	0120019
84TE	0150084	0150013	0120020
104TE	0150104	0150014	0120021

EK&EG Series Subracks Bracket

瑞德科诺 RDEKON

Bracket

Order information

Front bracket-EG

Rear bracket-EG

Front bracket-EK

Rear bracket-EK

Model	Order no	Order no	Order no	Order no
3U	0200001	0200004	0210001	0210004
4U	0200002	0200005	0210002	0210005
6U	0200003	0200006	0210003	0210006

瑞德科诺
RDEKONO

Standards/certifications

Inner and outer dimensions meet:IEC 60297-3-101, IEC 60297-3-102, IEC 60297-3-103, IEEE 1101.1 and IEEE 1101.10/11
Type of protection IP20 in accordance with IEC 60529
EMC testing to IEC 61587-3
Shock and vibration test reports:German "Bahn" standards BN 411002, BN 411003;NF F 60002, NF F 67012
IEC 61587-2, EN 50155, part 12.2.11

Customized service

Customize the side panel of the Subracks
Panel and panel opening, screen printing

EK+&EG+ PRO Series Subracks introduction

EK+&EG+ PRO series Subracks is a series of Subracks products developed by **RDEKONO** for the application of the 19" standard Subracks. After years of practical application shows that the EK+&EG+ PRO series Subracks has stable performance, solid structure and meets all the requirements of the 19" standard size and application. At the same time, the EK+&EG+ PRO series Subracks has the characteristics of high cost performance, rich components, flexible configuration and so on, which can meet the use requirements to the greatest extent

EK+&EG+ PRO Series Subracks introduction

EK+&EG+ PRO series Subracks is widely used in all kinds of standard electronic equipment and user-defined electronic systems, can be used to build CompactPCI,VME, VMEx64, PXI and other systems, can also be used as a general electronic plug-in box

RDEKONO PRO 3/6U Subrack(Railway Applications)

- Unshielded and shielded versions NFF61005/60002
- Unshielded and shielded versions EN50155 subrack
- Shielded versions for CompactPCI applications

瑞德科诺 RDEKON

19 "Subrack Subracks

- Shock and vibration resistant to IEC 61587-2, EN 50155,NFF 67012/NF F 60002, Germanrailway standards BN 411002/411003
- IEC 60297-3-101, IEC 60297-3-102, IEC 60297-3-103, IEEE 1101.1 and IEEE 1101.10/11 compatible
- Designed for extractor handles to IEEE 1101.10/11 and IEC 60297-3-103 for CompactPCI and VME 64x application
- EMC shielding easily retrofittable if needed

RDEKON PRO 3/6U Subrack(Kits)

- Unshielded and shielded versions
- Shielded versions for CompactPCI applications

EK&EG PRO Series Subracks Features

- **RDEKON** 19"Subrack subrack, manufactured by advanced technology
- EK+&EG+ PRO series products meet the 19" standard, easy to assemble (Refer to the company's 19" standard summary manual for details). Fully reflected the standardization, module The characteristics and advantages of chemical and serialization
- All series of products adopt universal standard parts combination, reflecting a high degree of flexibility, customers can according to the specific needs of the general standard parts or customized product vibration, impact test standards: according to IEC61587-1, NE50155, BN411002,NF F67012, NF F67002 test
- Complies with IEEE 1101.1 standard
- Can be used to build CompactPCI.VME, VMEx64 system platform
- The Subracks have good electromagnetic shielding performance

EK+ PRO Economy Series Subracks

瑞德科诺 RDEKON

3U/4U

- Subrack Shielding case (CompactPCI) · Light beam,Can better reduce the weight, bearing performance unchanged
- Suitable for CompactPCI and VME64x insertion and extractor handles
- Rear horizontal rail for backplane mounting with insulation strip;For applications that install backplanes or connectors, Horizontal rails, rear, for connector mounting (IEC 60603-2 / DIN 41612)
- Typical shielding 40dB at 1 GHz,30 dB at 2GHz(as to VG 95373 ,part15),on condition zhat zhe front is sealed with shielded front panels
- For real I/O application

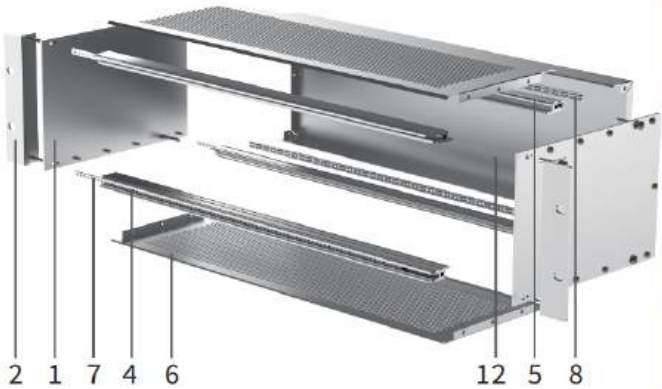

Delivery Comprises(kit)

Item	Name	Qty	Model
1	Side panel	2	/
2	Front bracket	2	/
3	Handle	2	choice
4	Front rails	2	/
5	Rear rails	2	/
6	Cover plate	2	/

Item	Name	Qty	Model
7	Threaded insert	4	/
8	Insulation strip	8	/
9	EMC gasket (Front rails)	2	Choice
10	EMC gasket (Front bracket)	3	Choice
11	Bent back panel	1	/

Order information

Height	Width	Depth	Model	Order no
3U	42TE	245	Perforated	3342-2451
3U	42TE	245	Without holes	3342-2450
3U	42TE	285	Perforated	3342-2851
3U	42TE	285	Without holes	3342-2850
3U	42TE	345	Perforated	3342-3451
3U	42TE	345	Without holes	3342-3450
3U	63TE	245	Perforated	3363-2451
3U	63TE	245	Without holes	3363-2450
3U	63TE	285	Perforated	3363-2851
3U	63TE	285	Without holes	3363-2850
3U	63TE	345	Perforated	3363-3451
3U	63TE	345	Without holes	3363-3450
3U	84TE	245	Perforated	3384-2451
3U	84TE	245	Without holes	3384-2450
3U	84TE	285	Perforated	3384-2851
3U	84TE	285	Without holes	3384-2850
3U	84TE	345	Perforated	3384-3451
3U	84TE	345	Without holes	3384-3450

Height	Width	Depth	Model	Material No
4U	42TE	245	Perforated	3442-2451
4U	42TE	245	Without holes	3442-2450
4U	42TE	285	Perforated	3442-2851
4U	42TE	285	Without holes	3442-2850
4U	42TE	345	Perforated	3442-3451
4U	42TE	345	Without holes	3442-3450
4U	63TE	245	Perforated	3463-2451
4U	63TE	245	Without holes	3463-2450
4U	63TE	285	Perforated	3463-2851
4U	63TE	285	Without holes	3463-2850
4U	63TE	345	Perforated	3463-3451
4U	63TE	345	Without holes	3463-3450
4U	84TE	245	Perforated	3484-2451
4U	84TE	245	Without holes	3484-2450
4U	84TE	285	Perforated	3484-2851
4U	84TE	285	Without holes	3484-2850
4U	84TE	345	Perforated	3484-3451
4U	84TE	345	Without holes	3484-3450

EK+ PRO Economy Series Subracks

瑞德科诺 RDEKON

6U

- Subrack Shielding case (CompactPCI) · Light beam,Can better reduce the weight, bearing performance unchanged
- Suitable for CompactPCI and VME64x insertion and extractor handles
- Rear horizontal rail for backplane mounting with insulation strip;For applications that install backplanes or connectors, Horizontal rails, rear, for connector mounting (IEC 60603-2 / DIN 41612)
- Typical shielding 40dB at 1 GHz,30 dB at 2GHz(as to VG 95373 ,part15),on condition zhat zhe front is sealed with shielded front panels
- For real I/O application

Delivery Comprises(kit)

Item	Name	Qty	Model
1	Side panel	2	/
2	Front bracket	2	/
3	Handle	2	choice
4	Front rails	2	/
5	Rear rails	2	/
6	Cover plate	2	/

Item	Name	Qty	Model
7	Threaded insert	4	/
8	Insulation strip	8	/
9	EMC gasket (Front rails)	2	Choice
10	EMC gasket (Front bracket)	3	Choice
11	Bent back panel	1	/

Order information

Height	Width	Depth	Model	Material No
6U	42TE	245	Perforated	3642-2451
6U	42TE	245	Without holes	3642-2450
6U	42TE	285	Perforated	3642-2851
6U	42TE	285	Without holes	3642-2850
6U	42TE	345	Perforated	3642-3451
6U	42TE	345	Without holes	3642-3450
6U	63TE	245	Perforated	3663-2451
6U	63TE	245	Without holes	3663-2450
6U	63TE	285	Perforated	3663-2851
6U	63TE	285	Without holes	3663-2850
6U	63TE	345	Perforated	3663-3451
6U	63TE	345	Without holes	3663-3450
6U	84TE	245	Perforated	3684-2451
6U	84TE	245	Without holes	3684-2450
6U	84TE	285	Perforated	3684-2851
6U	84TE	285	Without holes	3684-2850
6U	84TE	345	Perforated	3684-3451
6U	84TE	345	Without holes	3684-3450

EG+ PRO Rugged Series Subracks

瑞德科诺 RDEKON

3U/4U

- Subrack Shielding case (CompactPCI) · Heavy beam,Provide better load-bearing performance
- Suitable for CompactPCI and VME64x insertion and extractor handles
- Rear horizontal rail for backplane mounting with insulation strip;For applications that install backplanes or connectors, Horizontal rails, rear, for connector mounting (IEC 60603-2 / DIN 41612)
- Typical shielding 40dB at 1 GHz,30 dB at 2GHz(as to VG 95373 ,part15),on condition zhat zhe front is sealed with shielded front panels
- For real I/O application

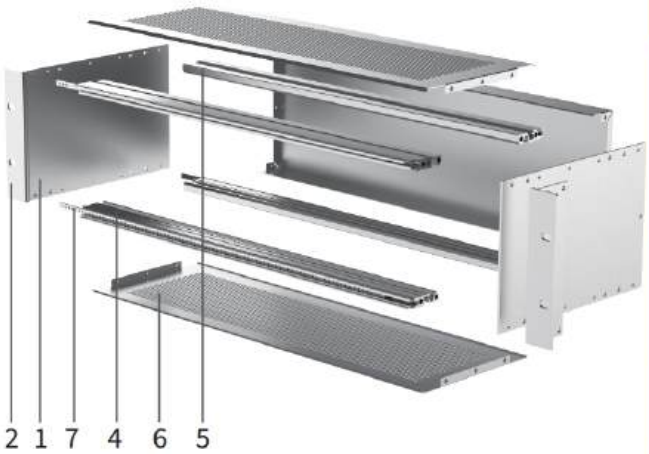

Delivery Comprises(kit)

Item	Name	Qty	Model
1	Side panel	2	/
2	Front bracket	2	/
3	Handle	2	Choice
4	Front rails	2	/
5	Rear rails	2	/

Item	Name	Qty	Model
6	Cover plate	2	/
7	Threaded insert	4	/
8	Insulation strip	8	/
9	EMC gasket (Front rails)	2	Choice
10	EMC gasket (Front bracket)	1	Choice

Order information

Height	Width	Depth	Model	Order no
3U	42TE	245	Perforated	4342-2451
3U	42TE	245	Without holes	4342-2450
3U	42TE	285	Perforated	4342-2851
3U	42TE	285	Without holes	4342-2850
3U	42TE	345	Perforated	4342-3451
3U	42TE	345	Without holes	4342-3450
3U	63TE	245	Perforated	4363-2451
3U	63TE	245	Without holes	4363-2450
3U	63TE	285	Perforated	4363-2851
3U	63TE	285	Without holes	4363-2850
3U	63TE	345	Perforated	4363-3451
3U	63TE	345	Without holes	4363-3450
3U	84TE	245	Perforated	4384-2451
3U	84TE	245	Without holes	4384-2450
3U	84TE	285	Perforated	4384-2851
3U	84TE	285	Without holes	4384-2850
3U	84TE	345	Perforated	4384-3451
3U	84TE	345	Without holes	4384-3450

Height	Width	Depth	Model	Material No
4U	42TE	245	Perforated	4442-2451
4U	42TE	245	Without holes	4442-2450
4U	42TE	285	Perforated	4442-2851
4U	42TE	285	Without holes	4442-2850
4U	42TE	345	Perforated	4442-3451
4U	42TE	345	Without holes	4442-3450
4U	63TE	245	Perforated	4463-2451
4U	63TE	245	Without holes	4463-2450
4U	63TE	285	Perforated	4463-2851
4U	63TE	285	Without holes	4463-2850
4U	63TE	345	Perforated	4463-3451
4U	63TE	345	Without holes	4463-3450
4U	84TE	245	Perforated	4484-2451
4U	84TE	245	Without holes	4484-2450
4U	84TE	285	Perforated	4484-2851
4U	84TE	285	Without holes	4484-2850
4U	84TE	345	Perforated	4484-3451
4U	84TE	345	Without holes	4484-3450

EG+ PRO Rugged Series Subracks

瑞德科诺 RDEKON

6U

- Subrack Shielding case (CompactPCI) · Heavy beam,Provide better load-bearing performance
- Suitable for CompactPCI and VME64x insertion and extractor handles
- Rear horizontal rail for backplane mounting with insulation strip;For applications that install backplanes or connectors, Horizontal rails, rear, for connector mounting (IEC 60603-2 / DIN 41612)
- Typical shielding 40dB at 1 GHz,30 dB at 2GHz(as to VG 95373 ,part15),on condition zhat zhe front is sealed with shielded front panels
- For real I/O application

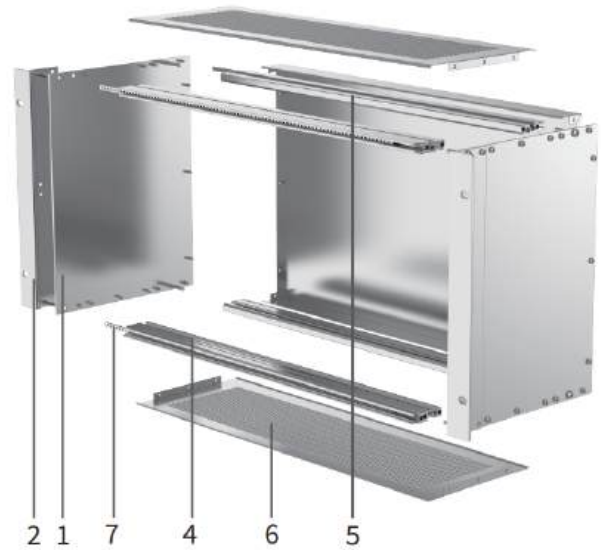

Delivery Comprises(kit)

Item	Name	Qty	Model
1	Side panel	2	/
2	Front bracket	2	/
3	Handle	2	Choice
4	Front rails	2	/
5	Rear rails	2	/

Item	Name	Qty	Model
6	Cover plate	2	/
7	Threaded insert	4	/
8	Insulation strip	8	/
9	EMC gasket (Front rails)	2	Choice
10	EMC gasket (Front bracket)	1	Choice

Order information

Height	Width	Depth	Model	Material No
6U	42TE	245	Perforated	4642-2451
6U	42TE	245	Without holes	4642-2450
6U	42TE	285	Perforated	4642-2851
6U	42TE	285	Without holes	4642-2850
6U	42TE	345	Perforated	4642-3451
6U	42TE	345	Without holes	4642-3450
6U	63TE	245	Perforated	4663-2451
6U	63TE	245	Without holes	4663-2450
6U	63TE	285	Perforated	4663-2851
6U	63TE	285	Without holes	4663-2850
6U	63TE	345	Perforated	4663-3451
6U	63TE	345	Without holes	4663-3450
6U	84TE	245	Perforated	4684-2451
6U	84TE	245	Without holes	4684-2450
6U	84TE	285	Perforated	4684-2851
6U	84TE	285	Without holes	4684-2850
6U	84TE	345	Perforated	4684-3451
6U	84TE	345	Without holes	4684-3450

EK+&EG+ PRO Series Subracks
Front horizontal Rail

Front horizontal Rail

Order information

Heavy Type EG+ Short Lip-Rugged

Compliant with IEC60297 standard for PCB rail installation and panel fixation

EG+ Heavy Type Long Lip

Use in conjunction with Handle

Lighit Type EK+ Short Lip

Compliant with IEC60297 standard for PCB rail installation and panel fixation

Long Lip EK+

Compliant with IEEE 1101.10 standard, Used in conjunction with the panel f or installing the CompactPCI puller Used for the installation of PCB rails

Model	Order no	Order no	Order no	Order no
42TE	0100017	0140016	0110031	0140019
63TE	0100024	0140025	0110046	0140026
84TE	0100018	0140017	0110032	0140020
104TE	0100019	0140018	0110033	0140021

Front Light Type Rail EK+

Used for mounting PCB guide rail and fixing panel

Long Lip EK+ Combination type

Compliant with IEEE 1101.10 standard Used in conjunction with the panel for installing the CompactPCI puller Used for the installation of PCB rails

EK+front light with J-shaped groove

Compliant with IEEE 1101.10 standard,Used in conjunction with the panel for installing the CompactPCI puller,Used for the installation of PCB rails, suitable for high-density connector boards,Can withstand higher insertion and extraction torque

Model	Order no	Order no	Order no
42TE	0110034	0140022	0110056
63TE	0110047	0140027	0110057
84TE	0110035	0140023	0110058
104TE	0110036	0140024	0110059

J-shaped groove type EK+composite front beam

Compliant with IEEE 1101.10 standard,Used in conjunction with the panel for installing the CompactPCI puller,Used for the installation of PCB rails, suitable for high-density connector boards,Can withstand higher insertion and extraction torque

EG+front light with J-shaped groove

Compliant with IEEE 1101.10 standard,Used in conjunction with the panel for installing the CompactPCI puller,Used for the installation of PCB rails, suitable for high-density connector boards,Can withstand higher insertion and extraction torque

Model	Order no	Order no
42TE	0110060	0110034
63TE	0110061	0110035
84TE	0110062	0110036
104TE	0110063	0110037

EK+&EG+ PRO Series Subracks
Rear horizontal Rail

瑞德科诺 RDEKON

Rear horizontal Rail

Order information

Heavy Type EG+ Rugged

Used for the installation and use of PCB rails and backplates

Rear Light Type Rail EK+

Used for the installation and use of PCB rails and backplates
Utility model patent: ZL202022600101.6
Design Patent: ZL202030680809.X

LigheType-T EK+

Used for the installation and use of PCB rails and backplates
Utility model patent: ZL202022632642.7
Design Patent: ZL202030680804.7

LigheType EK+

Used for the installation and use of PCB rails and backplates

Model	Order no	Order no	Order no	Order no
42TE	0100020	0110028	0110037	0110040
63TE	0100025	0110050	0110049	0110048
84TE	0100021	0110029	0110038	0110041
104TE	0100022	0110030	0110039	0110042
Cross Rails setting screw M4×18	1004078			

EK+&EG+ PRO Series Subracks Middle rails

瑞德科诺 RDEKON

Middle Rail

Order information

Light Type-EK+ Middle Rail

For indirest mounting of backplanes viainsulatin strip,order insulatinstrip separately

Light Type-EK+ transfer Middle Rail

Used for PCB rail installation and can be used in conjunction with the center beam

Model	Order no	Order no
42TE	0150019	0150022
63TE	0150025	0150026
84TE	0150020	0150023
104TE	0150021	0150024

EK+&EG+ PRO Series Subracks Bracket

瑞德科诺 RDEKON

Bracket

Order information

Front bracket-EG+

Rear bracket-EG+

Front bracket-EK+

Rear bracketEK+

Model	Order no	Order no	Order no	Order no
3U	0200008	0200011	0210008	0210011
4U	0200009	0200012	0210009	0210012
6U	0200010	0200013	0210010	0210013

瑞德科诺
RDEKONO

Standards/certifications

Inner and outer dimensions meet:IEC 60297-3-101, IEC 60297-3-102, IEC 60297-3-103, IEEE 1101.1 and IEEE 1101.10/11
Type of protection IP20 in accordance with IEC 60529
EMC testing to IEC 61587-3
Shock and vibration test reports:German "Bahn" standards BN 411002, BN 411003;NF F 60002, NF F 67012
IEC 61587-2, EN 50155, part 12.2.11

Customized service

Customize the side panel of the Subracks
Panel and panel opening, screen printing

BEK&BEG PRO Series Subracks introduction

BEK&BEG PRO series Subracks is a series of Subracks products developed by **RDEKONO** for the application of the 19" standard Subracks. After years of practical application shows that the BEK&BEG PRO series Subracks has stable performance, solid structure and meets all the requirements of the 19" standard size and application. At the same time, the BEK&BEG PRO series Subracks has the characteristics of high cost performance, rich components, flexible configuration and so on, which can meet the use requirements to the greatest extent

RDEKONO PRO 3/6U Subrack(Railway Applications)

- Unshielded and shielded versions NFF61005/60002
- Unshielded and shielded versions EN50155 subrack
- Shielded versions for CompactPCI applications

BEK&BEG PRO Series Subracks introduction

BEK&BEG PRO series Subracks is widely used in all kinds of standard electronic equipment and user-defined electronic systems, can be used to build CompactPCI,VME, VMEx64, PXI and other systems, can also be used as a general electronic plug-in box

瑞德科诺
RDEKON

19 "Subrack Subracks

- Shock and vibration resistant to IEC 61587-2, EN 50155,NFF 67012/NF F 60002, Germanrailway standards BN 411002/411003
- IEC 60297-3-101, IEC 60297-3-102, IEC 60297-3-103, IEEE 1101.1 and IEEE 1101.10/11 compatible
- Designed for extractor handles to IEEE 1101.10/11 and IEC 60297-3-103 for CompactPCI and VME 64x application
- EMC shielding easily retrofittable if needed

RDEKON PRO 3/6U Subrack(Kits)

- Unshielded and shielded versions
- Shielded versions for CompactPCI applications

BEK&BEG PRO Series Subracks Features

- **RDEKON** 19"Subrack subrack, manufactured by advanced technology
- BEK&BEG PRO series products meet the 19" standard, easy to assemble (Refer to the company's 19" standard summary manual for details). Fully reflected the standardization, module The characteristics and advantages of chemical and serialization.
- All series of products adopt universal standard parts combination, reflecting a high degree of flexibility, customers can according to the specific needs of the general standard parts or customized product vibration, impact test standards: according to IEC61587-1, NE50155, BN411002,NF F67012, NF F67002 test
- Complies with IEEE 1101.1 standard
- Can be used to build CompactPCI.VME, VMEx64 system platform
- The Subracks have good electromagnetic shielding performance

BEK PRO Economy Series Subracks

瑞德科诺 RDEKON

3U/4U

- Subrack Shielding case (CompactPCI) · Light beam,Can better reduce the weight, bearing performance unchanged
- Suitable for CompactPCI and VME64x insertion and extractor handles
- Rear horizontal rail for backplane mounting with insulation strip;For applications that install backplanes or connectors, Horizontal rails, rear, for connector mounting (IEC 60603-2 / DIN 41612)
- Typical shielding 40dB at 1 GHz,30 dB at 2GHz(as to VG 95373 ,part15),on condition zhat zhe front is sealed with shielded front panels
- For real I/O application

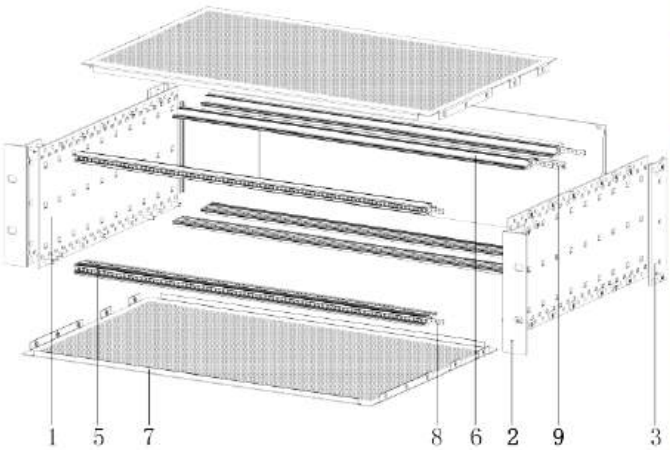

Delivery Comprises(kit)

Item	Name	Qty	Model
1	Side panel	2	/
2	Front bracket	2	/
3	Rear bracket	2	/
4	Handle	2	Choice
5	Front rails	4	/
6	Rear rails	2	/
7	Cover plate	2	/

Item	Name	Qty	Model
8	Threaded insert	6	/
9	Insulation strip	2	/
10	Perforated strip	2	/
11	EMC gasket (Front rails)	4	Choice
12	EMC gasket (Front bracket)	3	Choice
13	EMC gasket (Cover plate)	4	Choice
14	Screw installation package	1	/

Order information

Height	Width	Depth	Model	Order no
3U	42TE	235	Perforated	5342-2351
3U	42TE	235	Without holes	5342-2350
3U	42TE	295	Perforated	5342-2951
3U	42TE	295	Without holes	5342-2950
3U	42TE	355	Perforated	5342-3551
3U	42TE	355	Without holes	5342-3550
3U	63TE	235	Perforated	5363-2351
3U	63TE	235	Without holes	5363-2350
3U	63TE	295	Perforated	5363-2951
3U	63TE	295	Without holes	5363-2950
3U	63TE	355	Perforated	5363-3551
3U	63TE	355	Without holes	5363-3550
3U	84TE	235	Perforated	5384-2351
3U	84TE	235	Without holes	5384-2350
3U	84TE	295	Perforated	5384-2951
3U	84TE	295	Without holes	5384-2950
3U	84TE	355	Perforated	5384-3551
3U	84TE	355	Without holes	5384-3550

Height	Width	Depth	Model	Material No
4U	42TE	235	Perforated	5442-2351
4U	42TE	235	Without holes	5442-2350
4U	42TE	295	Perforated	5442-2951
4U	42TE	295	Without holes	5442-2950
4U	42TE	355	Perforated	5442-3551
4U	42TE	355	Without holes	5442-3550
4U	63TE	235	Perforated	5463-2351
4U	63TE	235	Without holes	5463-2350
4U	63TE	295	Perforated	5463-2951
4U	63TE	295	Without holes	5463-2950
4U	63TE	355	Perforated	5463-3551
4U	63TE	355	Without holes	5463-3550
4U	84TE	235	Perforated	5484-2351
4U	84TE	235	Without holes	5484-2350
4U	84TE	295	Perforated	5484-2951
4U	84TE	295	Without holes	5484-2950
4U	84TE	355	Perforated	5484-3551
4U	84TE	355	Without holes	5484-3550

BEK PRO Economy Series Subracks

瑞德科诺 RDEKON

6U

- Subrack Shielding case (CompactPCI) · Light beam,Can better reduce the weight, bearing performance unchanged
- Suitable for CompactPCI and VME64x insertion and extractor handles
- Rear horizontal rail for backplane mounting with insulation strip;For applications that install backplanes or connectors, Horizontal rails, rear, for connector mounting (IEC 60603-2 / DIN 41612)
- Typical shielding 40dB at 1 GHz,30 dB at 2GHz(as to VG 95373 ,part15),on condition zhat zhe front is sealed with shielded front panels
- For real I/O application

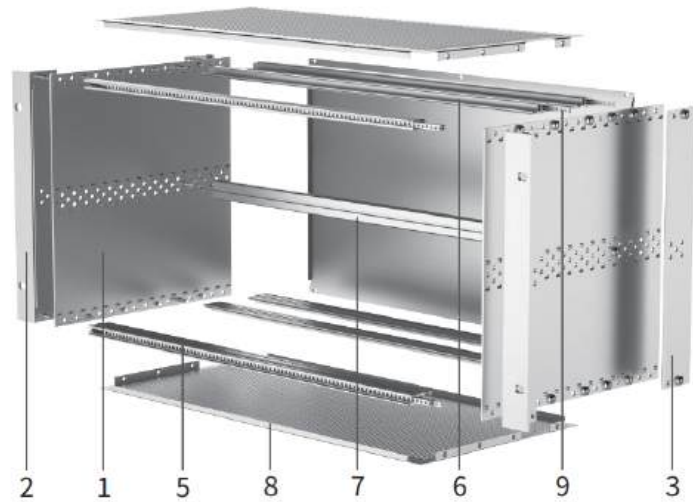

Delivery Comprises(kit)

Item	Name	Qty	Model
1	Side panel	2	/
2	Front bracket	2	/
3	Rear bracket	2	/
4	Handle	2	Choice
5	Front rails	4	/
6	Rear rails	2	/
7	Middle rails	1	/
8	Cover plate	2	/

Item	Name	Qty	Model
9	Threaded insert	8	/
10	Perforated strip	4	/
11	Insulation strip	4	/
12	EMC gasket (Front rails)	4	Choice
13	EMC gasket (Front bracket)	3	Choice
14	EMC gasket (Cover plate)	4	Choice
15	Screw installation package	1	/

Order information

Height	Width	Depth	Model	Material No
6U	42TE	235	Perforated	5642-2351
6U	42TE	235	Without holes	5642-2350
6U	42TE	295	Perforated	5642-2951
6U	42TE	295	Without holes	5642-2950
6U	42TE	355	Perforated	5642-3551
6U	42TE	355	Without holes	5642-3550
6U	63TE	235	Perforated	5663-2351
6U	63TE	235	Without holes	5663-2350
6U	63TE	295	Perforated	5663-2951
6U	63TE	295	Without holes	5663-2950
6U	63TE	355	Perforated	5663-3551
6U	63TE	355	Without holes	5663-3550
6U	84TE	235	Perforated	5684-2351
6U	84TE	235	Without holes	5684-2350
6U	84TE	295	Perforated	5684-2951
6U	84TE	295	Without holes	5684-2950
6U	84TE	355	Perforated	5684-3551
6U	84TE	355	Without holes	5684-3550

BEG PRO Rugged Series Subracks

瑞德科诺 RDEKON

3U/4U

- Subrack Shielding case (CompactPCI) · Heavy beam,Provide better load-bearing performance
- Suitable for CompactPCI and VME64x insertion and extractor handles
- Rear horizontal rail for backplane mounting with insulation strip;For applications that install backplanes or connectors, Horizontal rails, rear, for connector mounting (IEC 60603-2 / DIN 41612)
- Typical shielding 40dB at 1 GHz,30 dB at 2GHz(as to VG 95373 ,part15),on condition zhat zhe front is sealed with shielded front panels
- For real I/O application

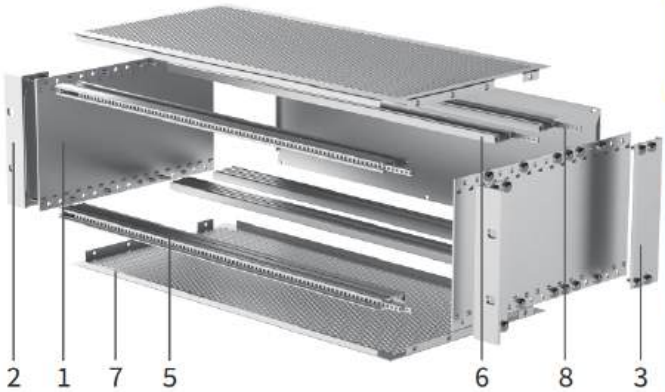

Delivery Comprises(kit)

Item	Name	Qty	Model
1	Side panel	2	/
2	Front bracket	2	/
3	Rear bracket	2	/
4	Handle	2	Choice
5	Front rails	4	/
6	Rear rails	2	/
7	Cover plate	2	/

Item	Name	Qty	Model
8	Threaded insert	6	/
9	Perforated strip	2	/
10	Insulation strip	2	/
11	EMC gasket (Front rails)	4	Choice
12	EMC gasket (Front bracket)	3	Choice
13	EMC gasket (Cover plate)	4	Choice
14	Screw installation package	1	/

Order information

Height	Width	Depth	Model	Order no
3U	42TE	235	Perforated	6342-2351
3U	42TE	235	Without holes	6342-2350
3U	42TE	295	Perforated	6342-2951
3U	42TE	295	Without holes	6342-2950
3U	42TE	355	Perforated	6342-3551
3U	42TE	355	Without holes	6342-3550
3U	63TE	235	Perforated	6363-2351
3U	63TE	235	Without holes	6363-2350
3U	63TE	295	Perforated	6363-2951
3U	63TE	295	Without holes	6363-2950
3U	63TE	355	Perforated	6363-3551
3U	63TE	355	Without holes	6363-3550
3U	84TE	235	Perforated	6384-2351
3U	84TE	235	Without holes	6384-2350
3U	84TE	295	Perforated	6384-2951
3U	84TE	295	Without holes	6384-2950
3U	84TE	355	Perforated	6384-3551
3U	84TE	355	Without holes	6384-3550

Height	Width	Depth	Model	Order no
4U	42TE	235	Perforated	6442-2351
4U	42TE	235	Without holes	6442-2350
4U	42TE	295	Perforated	6442-2951
4U	42TE	295	Without holes	6442-2950
4U	42TE	355	Perforated	6442-3551
4U	42TE	355	Without holes	6442-3550
4U	63TE	235	Perforated	6463-2351
4U	63TE	235	Without holes	6463-2350
4U	63TE	295	Perforated	6463-2951
4U	63TE	295	Without holes	6463-2950
4U	63TE	355	Perforated	6463-3551
4U	63TE	355	Without holes	6463-3550
4U	84TE	235	Perforated	6484-2351
4U	84TE	235	Without holes	6484-2350
4U	84TE	295	Perforated	6484-2951
4U	84TE	295	Without holes	6484-2950
4U	84TE	355	Perforated	6484-3551
4U	84TE	355	Without holes	6484-3550

BEG PRO Rugged Series Subracks

6U

- Subrack Shielding case (CompactPCI) · Heavy beam,Provide better load-bearing performance
- Suitable for CompactPCI and VME64x insertion and extractor handles
- Rear horizontal rail for backplane mounting with insulation strip;For applications that install backplanes or connectors, Horizontal rails, rear, for connector mounting (IEC 60603-2 / DIN 41612)
- Typical shielding 40dB at 1 GHz,30 dB at 2GHz(as to VG 95373 ,part15),on condition zhat zhe front is sealed with shielded front panels
- For real I/O application

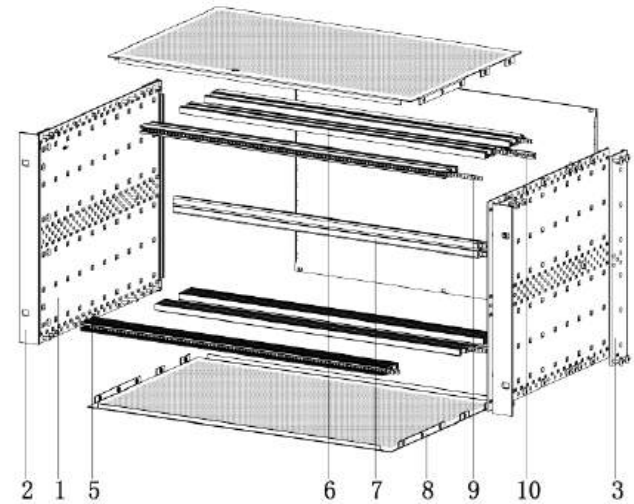

Delivery Comprises(kit)

Item	Name	Qty	Model
1	Side panel	2	/
2	Front bracket	2	/
3	Rear bracket	2	/
4	Handle	2	Choice
5	Front rails	4	/
6	Rear rails	2	/
7	Middle rails	1	/
8	Cover plate	2	/

Item	Name	Qty	Model
9	Threaded insert	8	/
10	Insulation strip	4	/
11	Perforated strip	4	/
12	EMC gasket (Front rails)	4	Choice
13	EMC gasket (Front bracket)	3	Choice
14	EMC gasket (Cover plate)	4	Choice
15	Screw installation package	1	/

Order information

Height	Width	Depth	Model	Material No
6U	42TE	235	Perforated	6642-2351
6U	42TE	235	Without holes	6642-2350
6U	42TE	295	Perforated	6642-2951
6U	42TE	295	Without holes	6642-2950
6U	42TE	355	Perforated	6642-3551
6U	42TE	355	Without holes	6642-3550
6U	63TE	235	Perforated	6663-2351
6U	63TE	235	Without holes	6663-2350
6U	63TE	295	Perforated	6663-2951
6U	63TE	295	Without holes	6663-2950
6U	63TE	355	Perforated	6663-3551
6U	63TE	355	Without holes	6663-3550
6U	84TE	235	Perforated	6684-2351
6U	84TE	235	Without holes	6684-2350
6U	84TE	295	Perforated	6684-2951
6U	84TE	295	Without holes	6684-2950
6U	84TE	355	Perforated	6684-3551
6U	84TE	355	Without holes	6684-3550

Front horizontal Rail

Order information

Heavy Type-BEG Short Lip

Compliant with IEC60297 standard
Used for PCB rail installation
and panel fixation

Lighit Type-BEK Short Lip

Compliant with IEC60297 standard
Used for PCB rail installation
and panel fixation

BEG-Long Lip

Compliant with IEEE 1101.10 standard,Used in conjunction with the panel for installing the CompactPCI puller ,Used for the installation of PCB rails

Model	Order no	Order no	Order no
42TE	009024201	009014203	009024203
63TE	009026301	009016303	009026304
84TE	009028401	009018401	009028403
104TE	0090210401	0090110401	0090210405

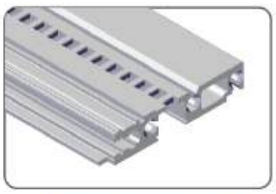

Rugged Short Lip

Compliant with IEC60297 standard
Used for PCB rail installation
and panel fixation

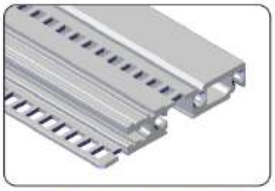

Rugged Long Lip

Compliant with IEEE 1101.10 standard,Used in conjunction with the panel for installing the CompactPCI puller ,Used for the installation of PCB rails

BEG-J Long Lip

Compliant with IEEE 1101.10 standard, used with panels for installing CompactPCI adapters, for PCB rail installation, suitable for high-density connector boards, capable of withstanding higher insertion and extraction torques

Model	Order no	Order no	Order no
42TE	009034201	009034202	009024212
63TE	009036301	009036302	009026312
84TE	009038401	009038402	009028412
104TE	0090310401	0090310402	0090210412

J-shaped groove type BEG composite front beam

Compliant with IEEE 1101.10 standard, used with panels for installing CompactPCI adapters, for PCB rail installation, suitable for high-density connector boards, capable of withstanding higher insertion and extraction torques

Model	Order no
42TE	009034201
63TE	009036301
84TE	009038401
104TE	0090310401

BEK&BEG PRO Series Subracks
Rear horizontal Rail

Rear horizontal Rail

Order information

Heavy Type-BEG

For indirect mounting of backplanes viainsulation strip, order insulation strip separately

Heavy Type-BEG-Z

For direct backplane assembly

LigheType-BEK

For indirect mounting of backplanes viainsulation strip, order insulation strip separately

LigheType-BEK-Z

For direct backplane assembly

Model	Order no	Order no	Order no	Order no
42TE	009024204	009024202	009014202	009114202
63TE	009026302	009026303	009116301	009116302
84TE	009028402	009028404	009018402	009018403
104TE	0090210402	0090210403	0090110402	0090110403

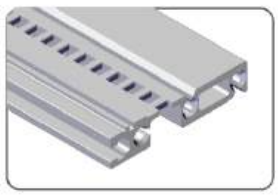

Rugged Horizontal Rail

For indirect mounting of backplanes viainsulation strip, order insulation strip separately

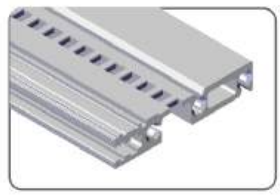

Rugged Horizontal Rail-Z

For direct backplane assembly

BEK With integral Z rail Rear rails

For direct mounting of connectors according to EN60603-2(DIN60297)

BEG With integral Z rail Rear rails

For direct mounting of connectors according to EN60603-2(DIN60297)

Model	Order no	Order no	Order no	Order no
42TE	009034203	009034204	009014205	009024205
63TE	009036303	009036304	009016304	009026305
84TE	009038403	009038404	009018404	009028405
104TE	0090310403	0090310404	0090110404	0090210404

BEG-II Horizontal Rail

For indirect mounting of backplanes viainsulation strip,order insulation strip separately

Model	Order no
42TE	009024211
63TE	009026311
84TE	009028411
104TE	0090210411

瑞德科诺 RDEKON

Middle rails

Order information

Light Type BEK Middle Rail

For indirect mounting of backplanes viainsulation strip, order insulation strip separately

Light Type BEK-Z Middle Rail

For direct backplane assembly

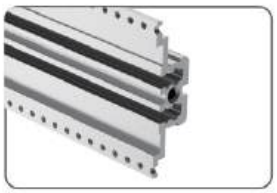

BEKWith integral Z rail Middle rails

For direct mounting of connectors according to EN60603-2(DIN60297)

Model	Order no	Order no	Order no
42TE	009014208	009014207	009014209
63TE	009016308	009016307	009016309
84TE	009018408	009018407	009018405
104TE	0090110408	0090110407	0090110409

Front and Rear Rail

Order information

Front and Rear Rail

For CompactCPCI at rearI/O-area and3,6U assembly

Model	Order no
42TE	009014206
63TE	009016306
84TE	009018406
104TE	0090110406

Side panel type F

Order information

Height U	Depth mm	Side panel type F	19"bracket without handle holes	19"bracket with handle holes	19"bracket depth-adjustable	Wall-mounting bracket	Rear angle for stainless steel gasket	EMC stainless steel gasket
			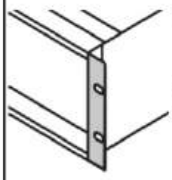	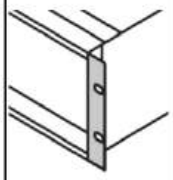	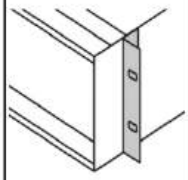	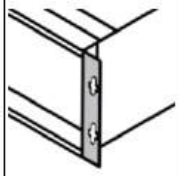	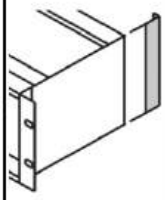	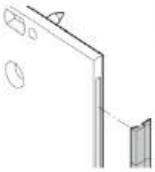
3	175	01131750	00803004	00803002	00803006	00803008	00803009	1008007
3	235	01132350						
3	295	01132950						
3	355	01133550						
3	415	01134150						
4	175	01141750	00804002	00804003	00804004	01141754	00804001	1008008
4	235	01142350						
4	295	01142950						
4	355	01143550						
4	415	01144150						
5	175	01151750	01151751	01151752	01151753	01151754	01151755	-
5	235	01152350						
5	295	01152950						
5	355	01153550						
5	415	01154150						
6	175	01161750	00806002	00806005	01161753	01161754	00806006	1008009
6	235	01162350						
6	295	01162950						
6	355	01163550						
6	415	01164150						
9	175	01191750	00809001	01191752	01191753	01191754	01191755	-
9	235	01192350						
9	295	01192950						
9	355	01193550						
9	415	01194150						
Screw, M4*14		1004229	1004229	1004229	1004229	-	1004229	-

Note :

- CompactPCI
- VME64x
- Grid holes of side panel 3 + 1 U
- Grid holes of side panel 1+3+1U

BEK&BEG PRO Series Subracks
Side panel type F

Side panel type F

Order information

Height U	Depth mm	Side panel type F	19"bracket without handle holes	19"bracket with handle holes	19"bracket depth-adjustable	Wall-mounting bracket	Rear angle for stainless steel gasket	EMC textile gasket
3	175	01131750	00803005	00803010	00803006	00803008	00803003	1008037
3	235	01132350						
3	295	01132950						
3	355	01133550						
3	415	01134150						
4	175	01141750	02141751	02141752	00804004	01141754	02141755	1008045
4	235	01142350						
4	295	01142950						
4	355	01143550						
4	415	01144150						
5	175	01151750	02151751	02151752	01151753	01151754	02151755	1008053
5	235	01152350						
5	295	01152950						
5	355	01153550						
5	415	01154150						
6	175	01161750	00806003 00806004	00806007	01161753	01161754	00806001	1008038
6	235	01162350						
6	295	01162950						
6	355	01163550						
6	415	01164150						
9	175	01191750	02191751	00809002	01191753	01191754	02191755	1008054
9	235	01192350						
9	295	01192950						
9	355	01193550						
9	415	01194150						
Screw, M4*14		1004229	1004229	1004229	1004229	-	1004229	-

Note :

- CompactPCI
- VME64x
- Grid holes of side panel 3 U+ 1 U
- Grid holes of side panel 1U+3U+1U

Side panel type F&H

Order information

Height U	Depth mm	 Side panel type L	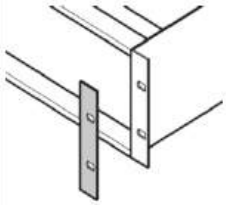 Front cover for type L
3	175	01231756	02231756
3	235	01232356	
3	295	01232956	
6	175	01261756	02261756
6	235	01262356	
6	295	01262956	
6	355	01263556	
Screw, M4*14		1004229	-

Side panel type H

Order information

Height U	Depth mm	 Type H without handle holes	 Type H with handle holes	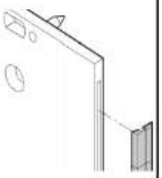 EMC stainless steel gasket	Height U	Depth mm	 Type H without handle holes	 Type H with handle holes	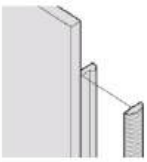 EMC textile gasket
3	175	01331757	01331758	1008007	3	175	02331757	02331758	1008037
3	235	01332357	01332358		3	235	02332357	02332358	
3	295	01332957	01332958		3	295	02332957	02332958	
3	355	01333557	01333558		3	355	02333557	02333558	
6	175	01361757	01361758	1008009	6	175	02361757	02361758	1008038
6	235	01362357	01362358		6	235	02362357	02362358	
6	295	01362957	01362958		6	295	02362957	02362958	
6	355	01363557	01363558		6	355	02363557	02363558	
Screw, M4*14		1004229	1004229	-	Screw, M4*14		1004229	1004229	-

Note :

- Beam fixing screws need to be ordered separately

BEK&BEG PRO Series Subracks
Side panel type R

Side panel type R

Order information

Height U	Depth mm	Side panel type F	Rear angle for stainless steel gasket	EMC textile gasket
3	175	02431752	02431755	1008037
3	235	02432352		
3	295	02432952		
3	355	02433552		
3	415	02434152		
6	175	02461752	02461755	1008038
6	235	02462352		
6	295	02462952		
6	355	02463552		
6	415	02464152		
Screw, M4*14		1004229	1004229	-

BEK&BEG PRO Series Subracks Supporting member

瑞德科诺 RDEKON

Die cast support components

Product description

- Please order the middle horizontal crossbeam separately (BEK Horizontal Rail, BEG Horizontal Rail, front and rear inserted crossbeam)
- Splices are used for combined installation in a single box (convenient for installing 6U devices and 2 x 3U devices)
- The front of the chassis must be covered with a 2HP front panel

Material and finish

- Aluminum alloy die-casting
- Surface treatment: galvanized

	Die cast support components	Front panel
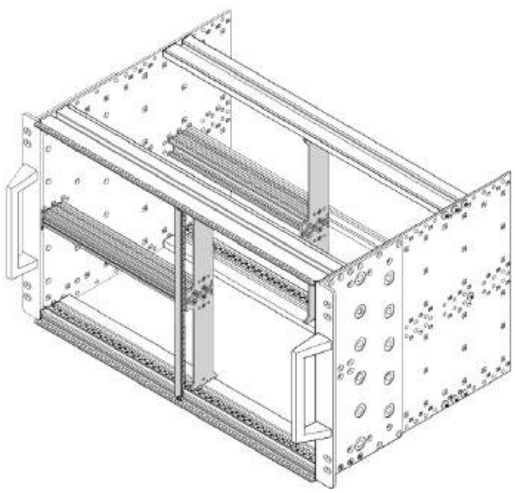		
Height U	2 Pieces/Pack	1 Piece
6	1048001	1048002

Annex

Collar screw with Pozidrive/slot M2.5x12, Steel nickel plating, 100 Pieces/Package	00100008
Shim 2.7x5x1, Material Quality PA6, 100 Pieces/Package	00100066
EMC textile gasket UL 94V-0, 1 Piece	1008038

瑞德科诺
RDEKON

STRUCTURE EXPLODED VIEW

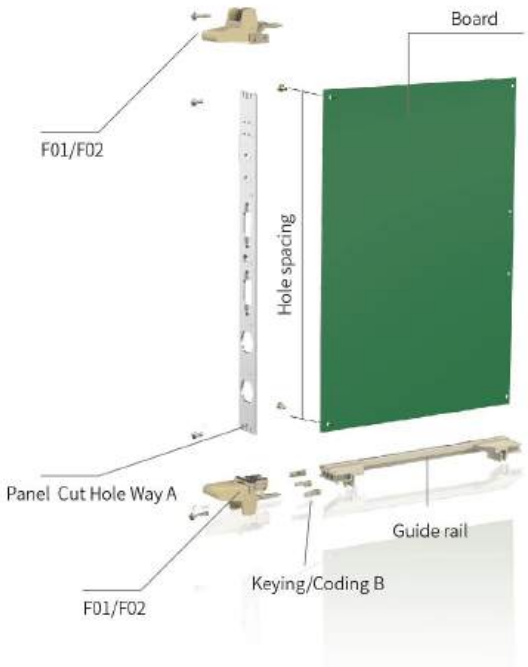

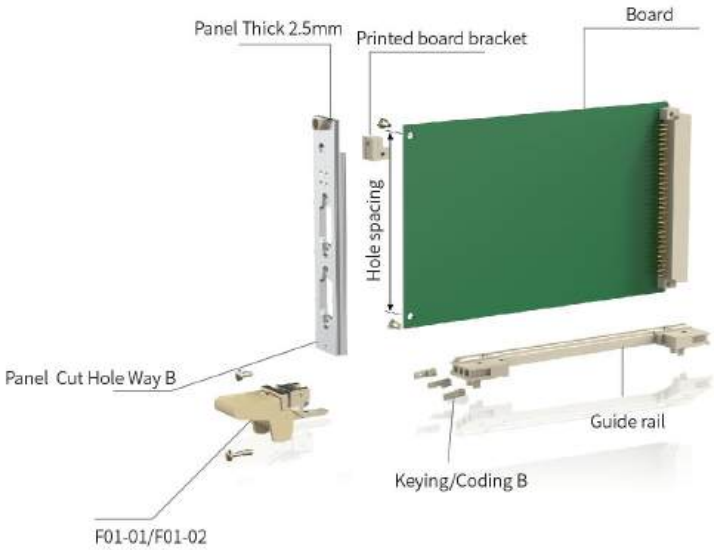

Order information

Order no	Name	Note	Model
1002057	Handle	ABC/DEF	F02/2.0
1002058	Handle	ABC/DEF	F01/2.5
1002059	Handle	ABC/DEF	F01-01/2.5
1002060	Handle	ABC/DEF	F01-02/2.5
1001014	Square Guide rail	160 (Square)	Adapter EK/EG
1001017	Square Guide rail	220 (Square)	Adapter EK/EG
1001048	F Guide rail	220 (Oblique)	Adapter EK/EG

Order no	Name	Note	Model
1001049	F Guide rail	160 (Oblique)	Adapter EK/EG
0100006	84TE-EG Front rails	EG	84TE
0100013	84TE-EG Rear rails	EG	84TE
0110006	84TE-EK Front rails	EK	84TE
0110013	84TE-EK Rear rails	EK	84TE
/	Panels	I/II/III	Choice
1009009	Keying/Coding	FCCF-B	F Guide rail

Static handle specification

瑞德科诺 RDEKONO

Handle

F01/F02 Handle

F01-01/F01-02 Handle

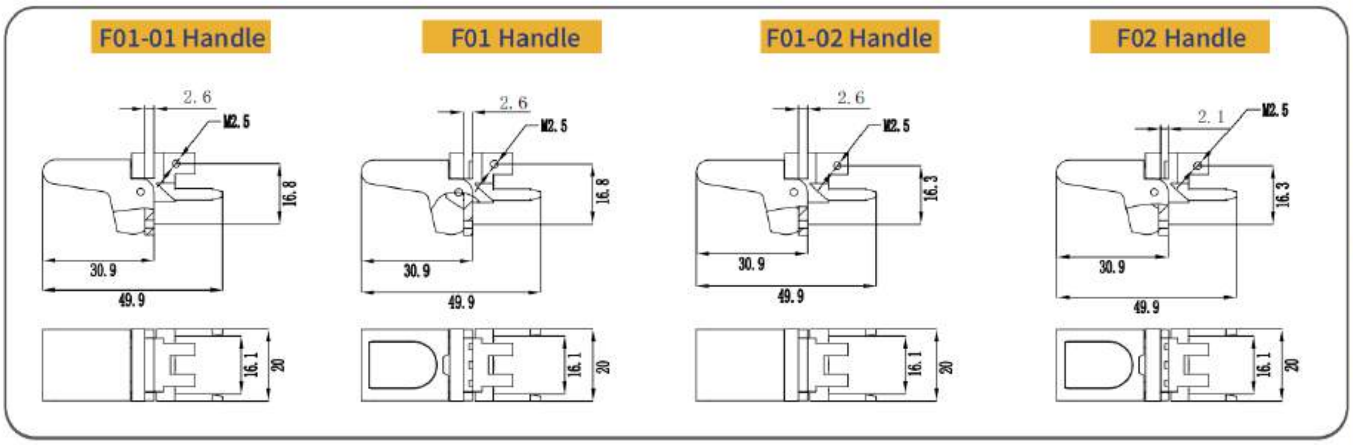

Standard Order information

Order no	Name	Note	Model	Handle Color	Ultimate torsion
1002058	Handle	F01/2.5	ABC/DEF	RAL7032 Grey	400N·m
1002057	Handle	F02/2.0	ABC/DEF	RAL7032 Grey	400N·m
1002059	Handle	F01-01/2.5	ABC/DEF	RAL7032 Grey	400N·m
1002060	Handle	F01-02/2.5	ABC/DEF	RAL7032 Grey	400N·m

Name	F01	F02	F01-01	F01-02
Order no	1002058	1002057	1002059	1002060
PCB Hole spacing 88.9mm	√	-	√	-
PCB Hole spacing90mm	-	√	-	√
Panel Cut Hole Way A	√	√	-	-
Panel Cut Hole Way B	-	-	√	√
Panel Thick 2.5mm	√	-	√	√
Panel Thick 2.0mm	-	√	-	-

Product description

- This product is mounted on the insert panel and connected directly to the PCB.
- For PCB board pull-out.
- Standard: IEEE1101.10, IEC60297-3-103
- Patent No.: ZL 2017 2 1518214.3
- Brand: RDEKONO

Performance description

- Die casting with guide pins on both sides, compatible with F-type guide rail .
- Compatible with EG\EK\EK+ profile inserts when used with F-type guide rails
- Safe plugging and unplugging can be achieved under the environment of maximum 400N plugging and unplugging force
- Codable
- Fire retardant standard: UL94V-0, EN45545-2
- High temperature aging standard: GB/T7141-2008, 90°C, 6h
- Low temperature embrittlement standard: GB/T5470-2008, -55°C
- ROHS standard: conform to 2011/65/EU

Material and finish

Plastic: PC+20% GF, zinc alloy nickel plated

瑞德科诺 RDEKON

STRUCTURE EXPLODED VIEW

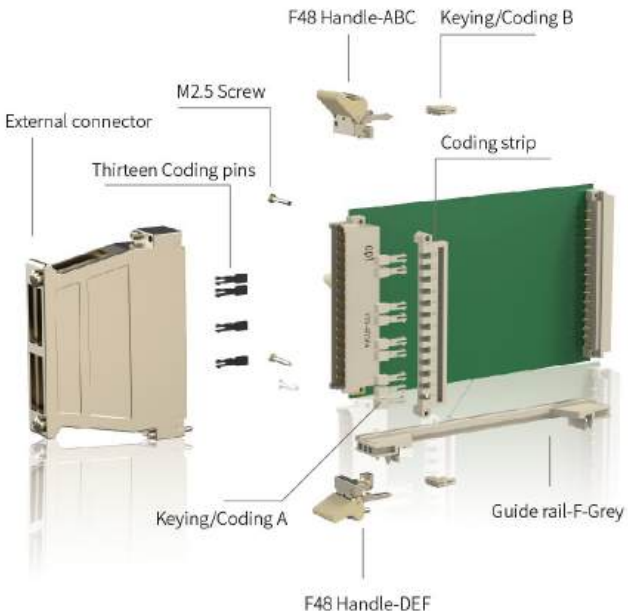

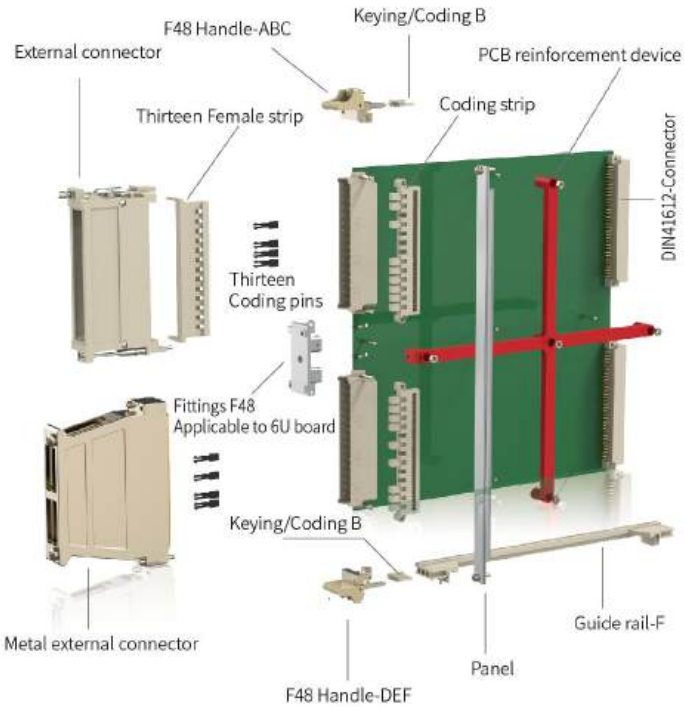

Name	Order no	Model	Note
Coding strip	1009001	Front end of grey board	FCCF-CZ
Keying/Coding A	1009002	Front end of grey board	FCCF-A
Thirteen Female strip	1009003	Grey external connector	FCCF-CZ13
Thirteen Coding pins	1009004	Black external connector	FCCF-X13
Keying/Coding B	1009009	F Guide rail	FCCF-B
Handle	1002063	F48 (Top)	\
Handle	1002065	F48-Black handle (Top)	\
Handle	1002299	F48-1 Top	\
Handle	1002064	F48 (Bottom)	\

Name	Order no	Model	Note
Handle	1002066	F48-Black handle (Bottom)	\
Handle	1002300	F48-1 Bottom	\
F Guide rail	1001048	220 (Oblique)	Adapter EK/EG
F Guide rail	1001049	160 (Oblique)	Adapter EK/EG
Square guide rail	1001014	160 (Square)	Adapter EK/EG
Square guide rail	1001017	220 (Square)	Adapter EK/EG
Fittings F48	BQ002.002.006	20*49.5*13.2	Applicable to 6U board
Front panel	057	II Sectional material	057 Series
PCB reinforcement device	1002310	Red	PCB reinforcement device

F48 Series static handle specification

F48 Series Handle

Standard (RAL7032)

Enhanced (RAL7032)

Handle Top (ABC)

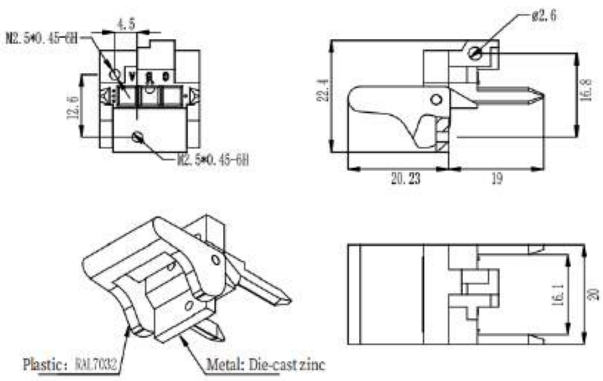

Handle bottom (DEF)

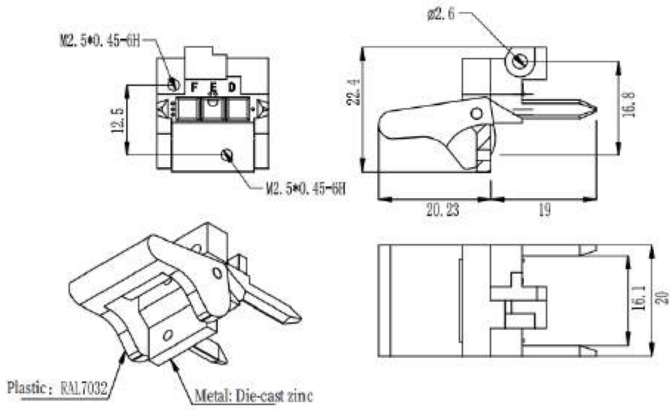

Standard Order information

Order no	Name	Note	Model	Color	Ultimate torsion
1002063	Handle	F48(Top)	ABC	RAL7032 Grey	300N·m
1002064	Handle	F48(bottom)	DEF	RAL7032 Grey	300N·m
1002065	Handle	F48(Top)	ABC	RAL9011 Black	300N·m
1002066	Handle	F48(bottom)	DEF	RAL9011 Black	300N·m

Enhanced Order information

Order no	Name	Note	Model	Color	Ultimate torsion
1002299	Handle	F48-1(Top)	ABC	RAL7032 Grey	500N·m
1002300	Handle	F48-1(bottom)	DEF	RAL7032 Grey	500N·m

Product description

- This product is used for high-density connectors for unplugging and plugging, which can be directly connected to PCB
- Standard compliance: IEC60297-3-103
- Patent No.: ZL 2017 2 1518228.5
- Brand: RDEKONO

Performance description

- Comes with metal positioning claw, matching with F-type guide rail
- Standard F48 handle for safe insertion and removal at up to 300N
- Reinforced F48 handle for safe insertion and removal at up to 500N
- Fire protection standard: UL94V-0, EN45545-2
- Aging standard: GB/T7141-2008,90°C, 6h
- Embrittlement standard: GB/T5470-2008, -55°C
- ROHS standard: in line with 2011/65/EU

Material and finish

Plastic: PC+20% GF, zinc alloy nickel plated

NOTE The size of the reinforced type is the same as that of the standard type, but the ultimate pulling force is different; Both standard and reinforced models support handle color customization

Static handle specification

瑞德科诺 RDEKON

Handl eaccessories

Order information

Order no	Name	Note	Model
1001048	Guide rail-F	220 (Oblique)	Adapter EK/EG
1001049	Guide rail-F	160 (Oblique)	Adapter EK/EG
1001014	Square guide rail	160 (Square)	Adapter EK/EG
1001017	Square guide rail	220 (Square)	Adapter EK/EG

Product description

- Used with F48/F01 series handle for PCB board guiding installation.
- Suitable for PCB board with 160mm/220mm depth.
- Use with F48/F01 series handle and error-proof code pin.
- Prevents PCB board from being inserted by mistake.

Performance description

- Patent: ZL 2017 2 1517360.4
- Fire retardant test report: TC.17.04.000972
- Grade R22-R23 contains items: oxygen index test, smoke density test, toxicity test.
- Standard compliance: EN 45545-2:2013 + A1:2015(E)
- Low-temperature embrittlement inspection standard: GB/T5470-2008 -55°C
- High-temperature aging inspection standard: GB/T7141-2008, 90°C, 6h

Material and finish

Plastic: PC+20%GF

Keying/Coding Usage specification

For example, drawing requirements provided by the customer keying/Coding is A4B1C2 D4E1F2 ,The actual installation is shown as follows

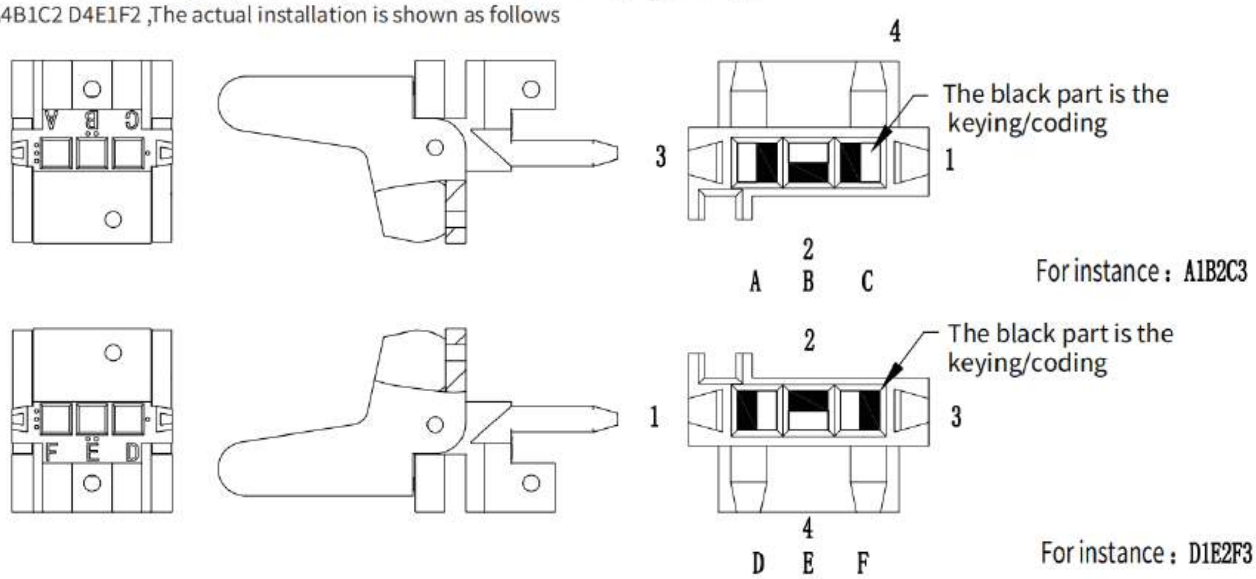

Handle、Guide rail、Keying/Coding, Coordination installation diagram:

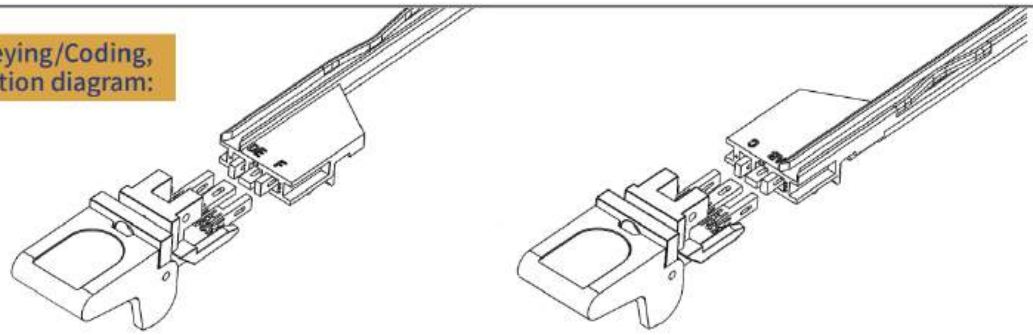

Board Accessories

Cross stiffener

Product description

- Installed on the PCB board, make the card more solid, can effectively avoid deformation and damage to the card under severe vibration.
- Only applicable to board height 6U, board depth 220mm.

Performance description

- High-temperature aging standard: GB/T7141-2008, 90°C, 6h
- Low temperature embrittlement standard: GB/T5470-2008, -55°C
- Fire retardant standard: UL94V-0, EN45545-2
- Fire resistance standard: EN 45545-2:2013+A1:2015(E)
- ROHS standard: 2011/65/EU

Material and finish

>PA+20%GF

Cut-Size

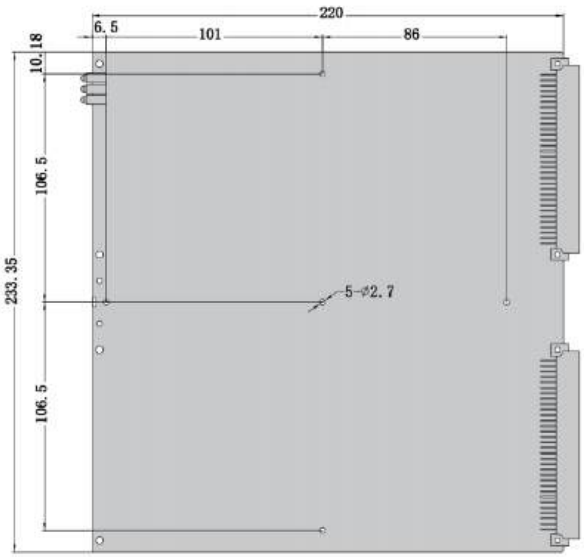

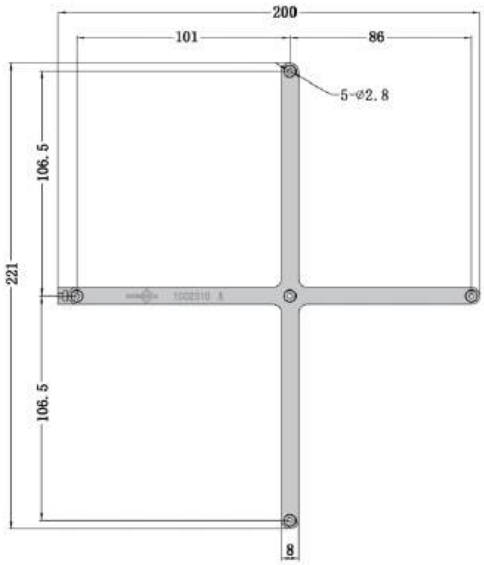

Schematic

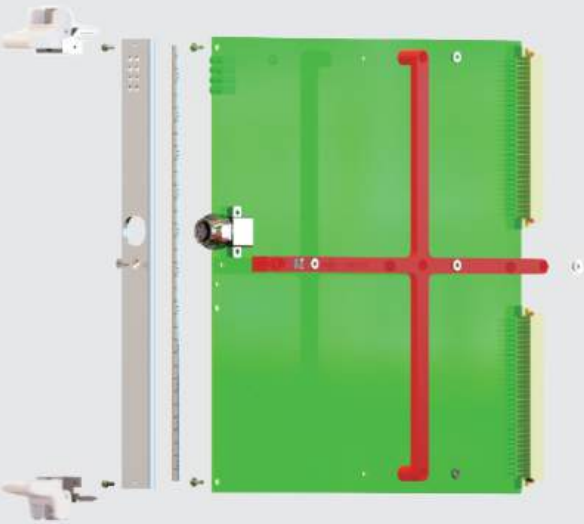

Delivery Comprises(kit)

Name	Qty	Model	Colour code	Order no
Cross stiffener	1	Red	RAL3018	1002310
Square nrt	1	M2.5	/	1005002
Hex Nut	5	M2.5	/	1005001
Pozidrive c/sk screw	1	M2.5x6	/	1004011
Pan head Pozidrive c/sk screw	5	M2.5x16	/	1004008

瑞德科诺 RDEKON

F48-K RELATED STRUCTURE EXPLODED VIEW

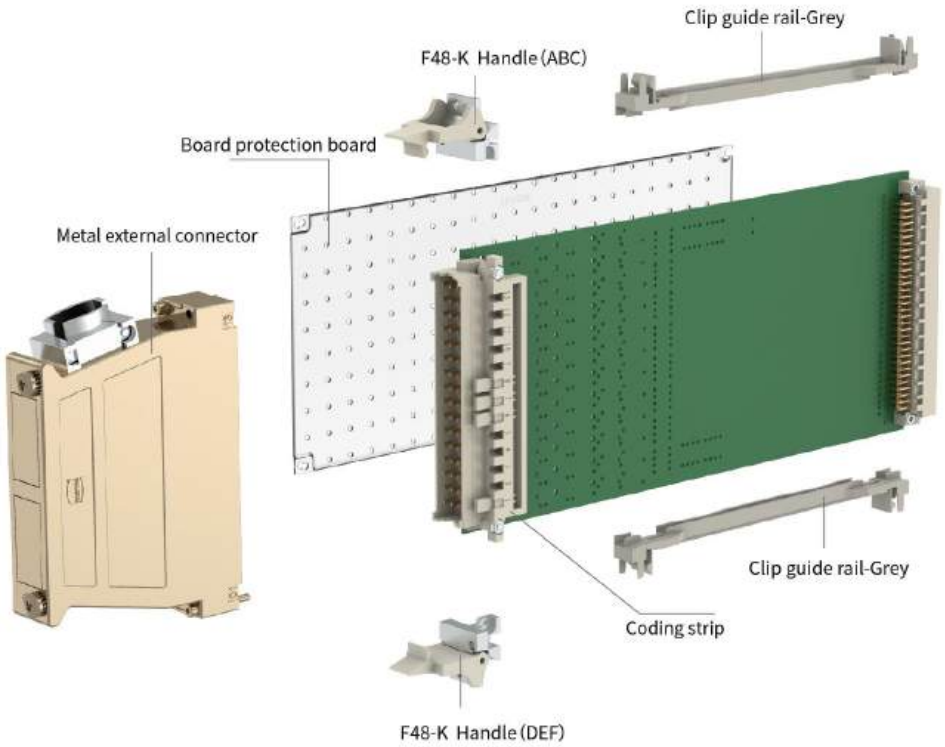

Order information

Name	Order no	Model	Note
Coding strip	1009001	Front end of grey board	FCCF-CZ
Keying/Coding B	1009009	F Guide rail	FCCF-B
Handle	1002484	F48-K (Top)	ABC
Handle	1002485	F48-K (Bottom)	DEF

Name	Order no	Model	Note
Clip guide rail	1001044	/	Adapter EK/EG
Clip guide rail	1001045	/	Adapter EK/EG
Board protection board	1037001	3U160	Adapter 160mm Power board
Board protection board	1037011	3U220	Adapter 220mm Power board

F48 Series static handle specification

F48-K Handle

F48-K (RAL7032)

F48-K (RAL7032)

Handle Top (ABC)

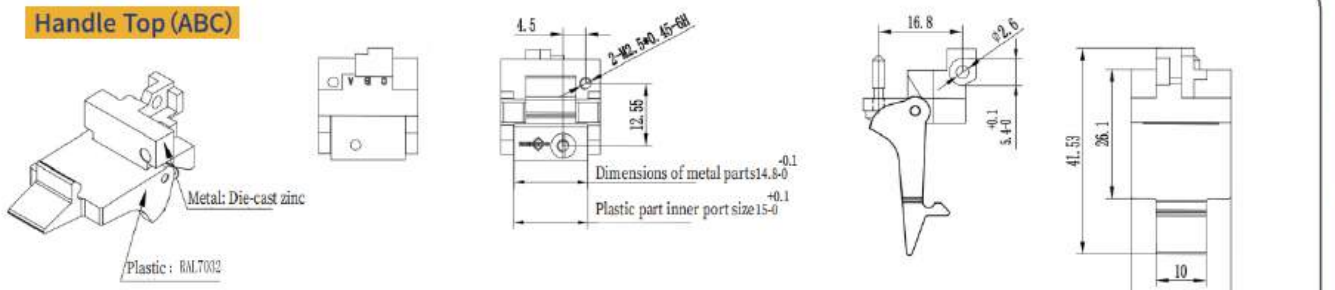

Handle bottom (DEF)

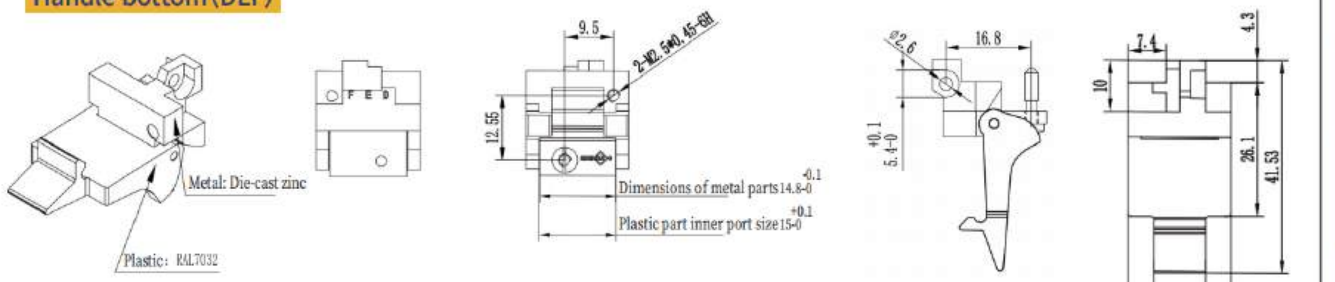

Performance description

F48-K puller compatible with various forms of card guides
Fire protection standards: UL94V-0, EN45545-2
Aging standard: GB/T7141-2008, 90 °C, 6h
Brittle standard: GB/T5470-2008, -55 °C
ROHS standard: compliant with 2011/65/EU

Product description

This product is mainly used for unplugging PCB boards and installing external connectors, providing additional installation torque for external connectors and improving the reliability of electrical connections.

The front end of EURO CARD is welded with connectors that comply with DIN41612 standard, which are used in conjunction with external connectors for front-end outgoing lines

Material and finish

PC+20%GF, Zinc alloy nickel plating
Color: RAL7032
Support customization of other colors, inquire by phone

Order information

Order no	Name	Note	Model	Color
1002484	Handle	F48-K (Top)	ABC	RAL7032 Grey
1002485	Handle	F48-K (bottom)	DEF	RAL7032 Grey

瑞德科诺
RDEKON

F48-KB RELATED STRUCTURE EXPLODED VIEW

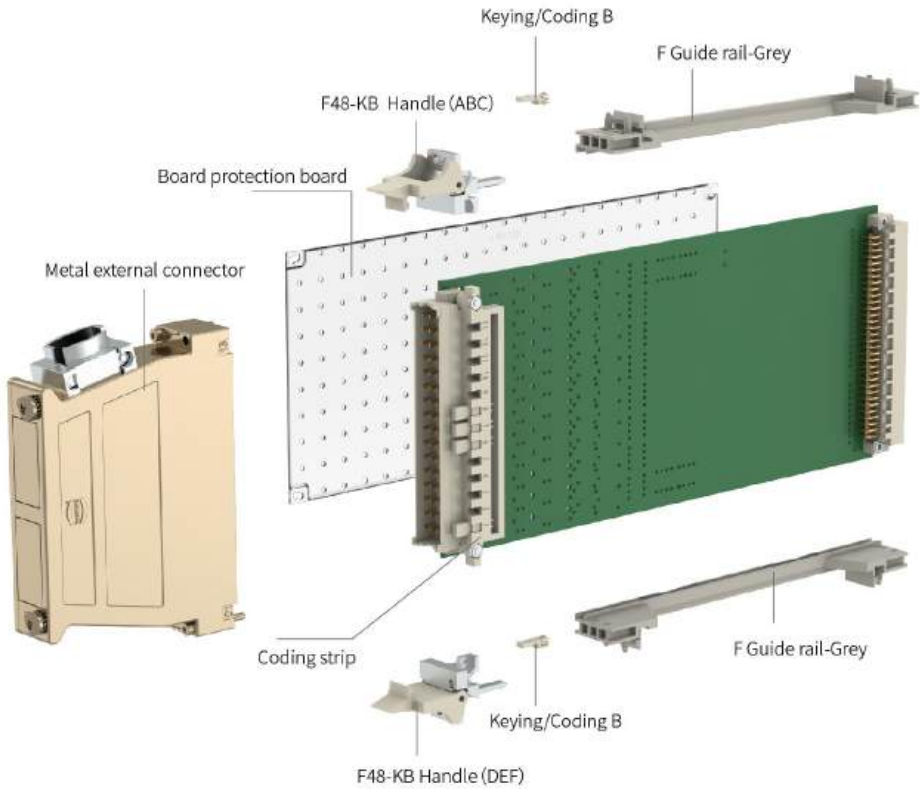

Order information

Name	Order no	Model	Note
Coding strip	1009001	Front end of grey board	FCCF-CZ
Keying/Coding B	1009009	F Guide rail	FCCF-B
Handle	1002508	F48-KB (Top)	ABC
Handle	1002509	F48-KB (Bottom)	DEF
F Guide rail	1001048	220 (Oblique)	Adapter EK/EG

Name	Order no	Model	Note
F Guide rail	1001049	160 (Oblique)	Adapter EK/EG
Square guide rail	1001014	160 (Square)	Adapter EK/EG
Square guide rail	1001017	220 (Square)	Adapter EK/EG
Board protection board	1037001	3U160	Adapter 160mm Power board
Board protection board	1037011	3U220	Adapter 220mm Power board

F48 Series static handle specification

F48-K Handle

F48-KB (RAL7032)

F48-KB (RAL7032)

Handle Top (ABC)

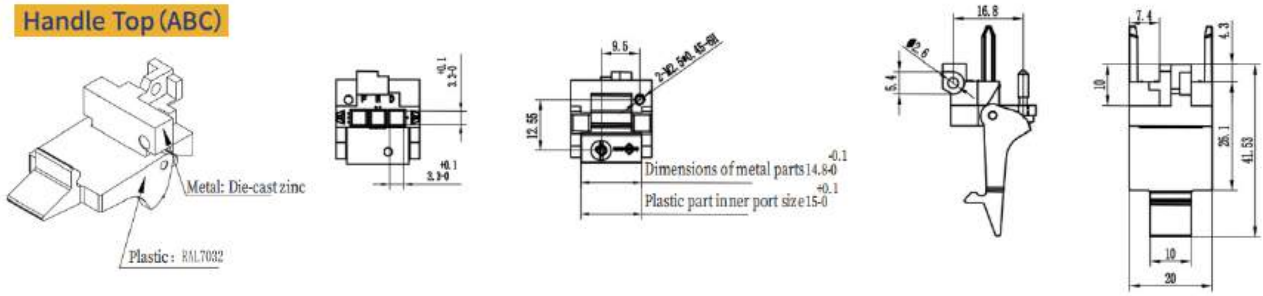

Handle bottom (DEF)

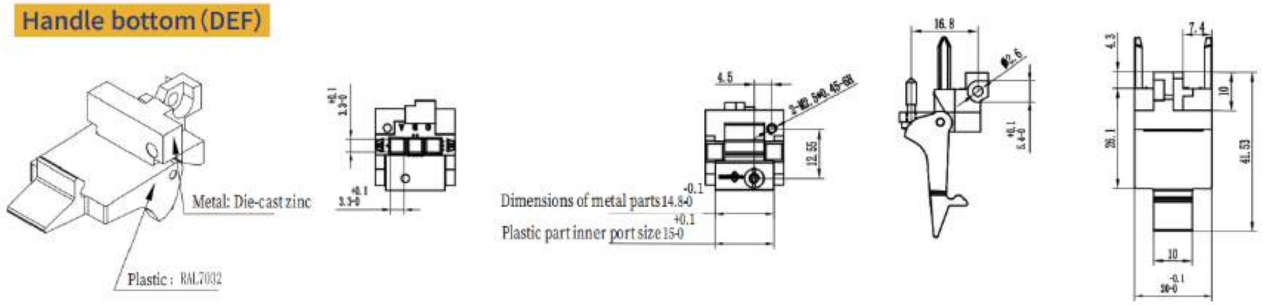

Performance description

F48-KB puller is used in conjunction with an encoder rail to achieve anti insertion error function (refer to page 42 for anti insertion error usage specifications)
Fire protection standards: UL94V-0, EN45545-2
Aging standard: GB/T7141-2008, 90 °C, 6h
Brittle standard: GB/T5470-2008, -55 °C
ROHS standard: compliant with 2011/65/EU

Product description

This product is mainly used for unplugging PCB boards and installing external connectors, providing additional installation torque for external connectors and improving the reliability of electrical connections.

The front end of EURO CARD is welded with connectors that comply with DIN41612 standard, which are used in conjunction with external connectors for front-end outgoing lines

Material and finish

PC+20%GF, Zinc alloy nickel plating
Color: RAL7032
Support customization of other colors, inquire by phone

Order information

Order no	Name	Note	Model	Color
1002508	Handle	F48-KB (Top)	ABC	RAL7032 Grey
1002509	Handle	F48-KB (bottom)	DEF	RAL7032 Grey

Static handle specification

瑞德科诺 RDEKON

Handle

I Handle

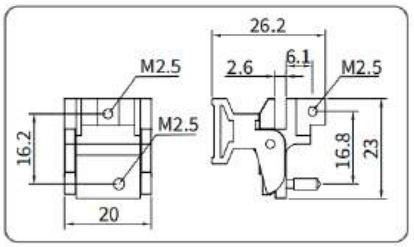

Order information

Order no	Name	Model	color	Colour code
1002001	Handle	I	Grey	RAL7047
1002003	Handle	I	Black	RAL9011

I-SX Handle

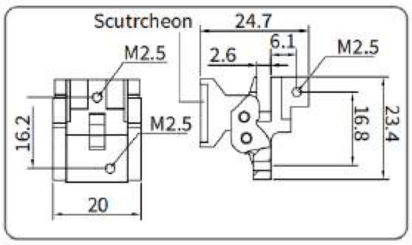

Order no	Name	Model	color	Colour code
1002006	Handle	I-SX	Grey	RAL7032
1002007	Handle	I-SX	Black	RAL9011
1025010	Scutcheon	/	Natural color	/

Product description

- This product is mounted on the insert panel and connected directly to the PCB.
- For PCB board insertion and extraction.
- 3U panel requires only one handle below.
- Plastic parts can be screen printed on the front.
- Works with card guides
- Compliant with IEEE1101.10 standard
- Signage purchased separately, signage text can be customized

Performance description

- High-temperature aging standard: GB/T7141-2008,,90°C, 6h
- Low temperature embrittlement standard: GB/T5470-2008, -55°C
- Fire retardant standard: UL94V-0, EN45545-2
- Fire resistance standard: EN 45545-2:2013+A1:2015(E)
- ROHS standard: 2011/65/EU

Material and finish

- Plastic: PC+20% GF, zinc alloy nickel plated
- Plastic: PC+20% GF, zinc alloy nickel plated

Cut-SIze

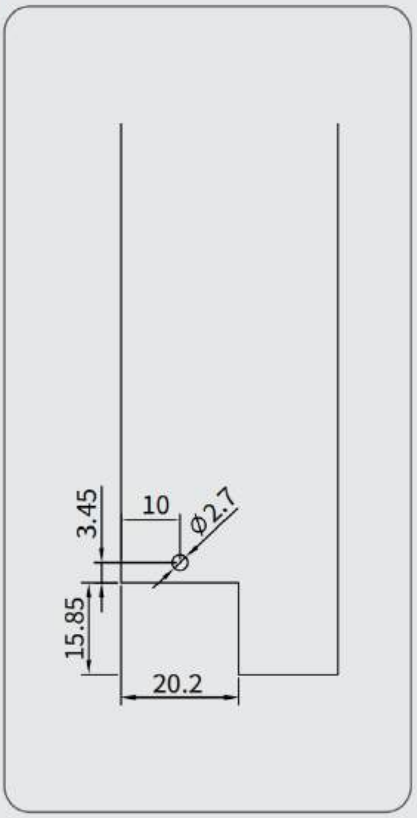

Schematic

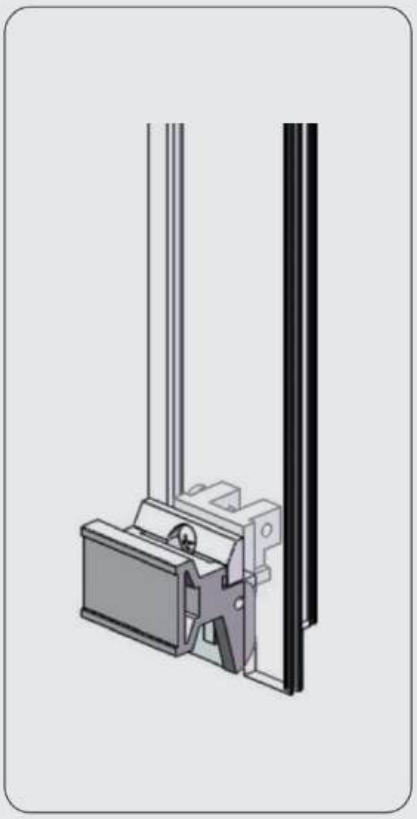

Static handle specification

Handle

Type II-Z Handle

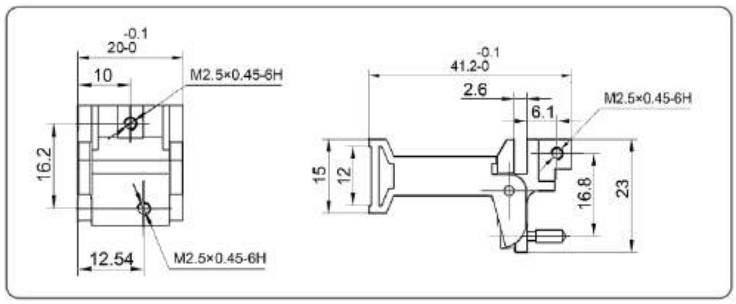

Order information

Order no	Name	Model	color	Colour code
1002511	Handle	Type II-Z	Grey	RAL7047
1002512	Handle	Type II-Z	Black	RAL9011

Product description

- This product is mounted on the insert panel and connected directly to the PCB.
- For PCB board insertion and extraction.
- 3U panel requires only one handle below.
- Plastic parts can be screen printed on the front.
- Works with card guides
- Compliant with IEEE1101.10 standard

Performance description

- High-temperature aging standard: GB/T7141-2008,,90°C, 6h
- Low temperature embrittlement standard: GB/T5470-2008, -55°C
- Fire retardant standard: UL94V-0, EN45545-2
- Fire resistance standard: EN 45545-2:2013+A1:2015(E)
- ROHS standard: 2011/65/EU

Material and finish

- Plastic: PC+20% GF, zinc alloy nickel plated

Cut-SIze

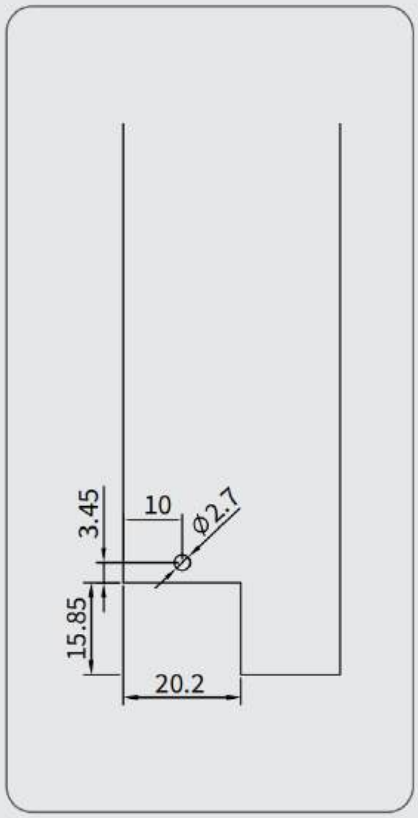

Schematic

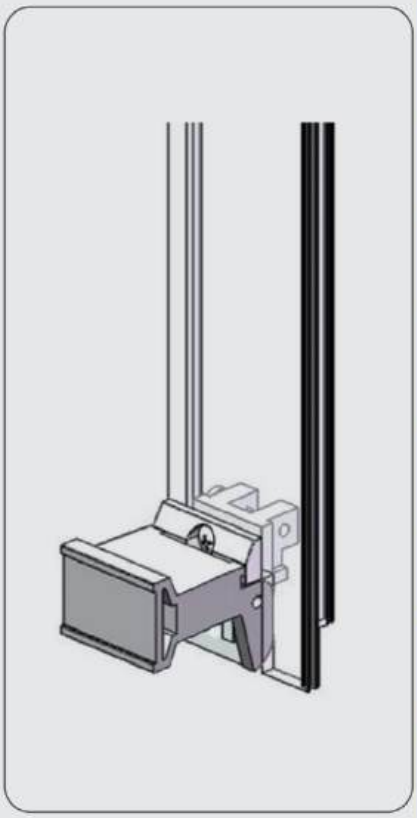

Static handle specification

瑞德科诺 RDEKON

Handle

III Handle

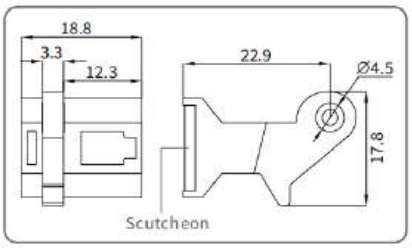

III Handle

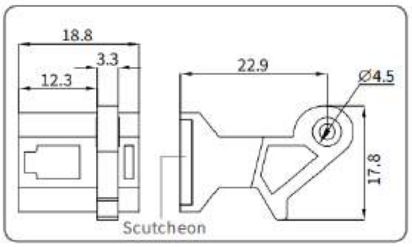

Order information

Order no	Name	Model	color	Colour code
1002368	Handle	III (Top)	Grey	RAL7023
1002367	Handle	III (Bottom)	Grey	RAL7023
1002372	Handle	III (Top)	Black	RAL9011
1002373	Handle	III (Bottom)	Black	RAL9011

Delivery includes

Order no	Name	3U Qty	6U Qty	Model
1002368	III Handle	/	1	III Handle Top
1002367	III Handle	1	1	III Handle bottom
1025010	Scutcheon	1	2	18.7x13.3x1.5
1002369	Shaft	1	2	3.5x4.5
1015004	Printed board bracket	1	2	Metal-B
1004011	Screw	1	2	M2.5x6
1004009	Screw	1	2	M2.5x12

Product description

- For flat panels/U-shaped panels
- For unplugging cards
- 3U panel requires only one handle below
- Printed label on the front of the plastic part
- Works with card guides
- Compliant with IEEE1101.10 standard

Performance description

- High-temperature aging standard: GB/T7141-2008,,90°C, 6h
- Low temperature embrittlement standard: GB/T5470-2008, -55°C
- Fire retardant standard: UL94V-0, EN45545-2
- Fire resistance standard: EN 45545-2:2013+A1:2015(E)
- ROHS standard: 2011/65/EU

Material and finish

PC+20%GF; Copper

Cut-Size

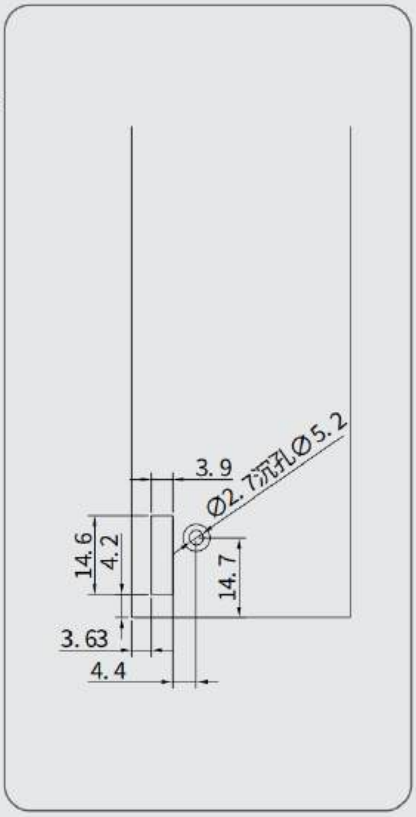

Schematic

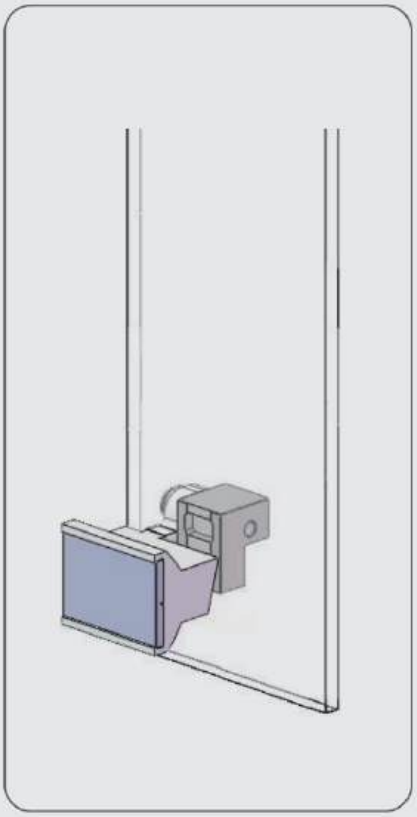

Static handle specification

瑞德科诺 RDEKON

Handle

T01/T02 Handle

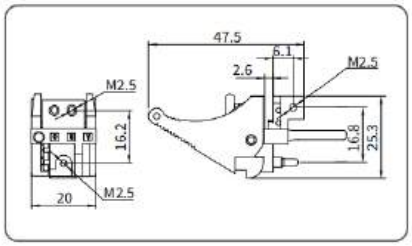

Order information

Order no	Name	Model	color	Colour code
1002012	Handle	T01 (Top)	Black handle+red button	RAL9011+RAL3031
1002013	Handle	T01 (Bottom)	Black handle+red button	RAL9011+RAL3031
1002374	Handle	T01 (Top)	Grey handle+red button	RAL7035+RAL3031
1002375	Handle	T01 (Bottom)	Grey handle+red button	RAL7035+RAL3031

T01/T02 Handle

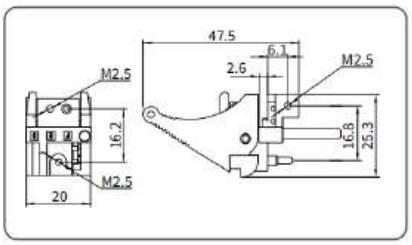

Order no	Name	Model	color	Colour code
1002016	Handle	T02 (Top)	Black handle+dark red button	RAL9011+RAL3007
1002017	Handle	T02 (Bottom)	Black handle+dark red button	RAL9011+RAL3007
1002380	Handle	T02 (Top)	Grey handle+dark red button	RAL7035+RAL3007
1002381	Handle	T02 (Bottom)	Grey handle+dark red button	RAL7035+RAL3007

Product description

- Suitable for flat panel/U-shaped panel
- For PCB board insertion and extraction
- Use with front rails with square hole
- Optional micro switch for hot-swapping
- Codable to realize anti-insertion function
- Compliant with IEEE1101.10 standard

Performance description

- High-temperature aging standard: GB/T7141-2008,,90°C, 6h
- Low temperature embrittlement standard: GB/T5470-2008, -55°C
- Fire retardant standard: UL94V-0, EN45545-2
- Fire resistance standard: EN 45545-2:2013+A1:2015(E)
- ROHS standard: 2011/65/EU

Material and finish

- Plastic: PC+20% GF, zinc alloy nickel plated
- Plastic: PC+20% GF, zinc alloy nickel plated

Cut-SIze

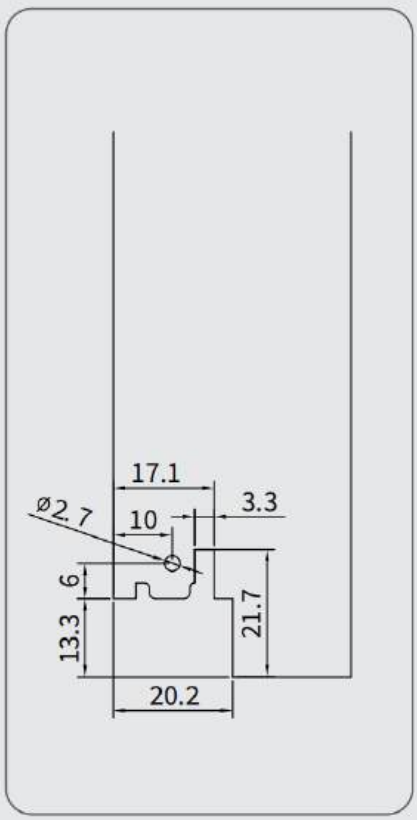

Schematic

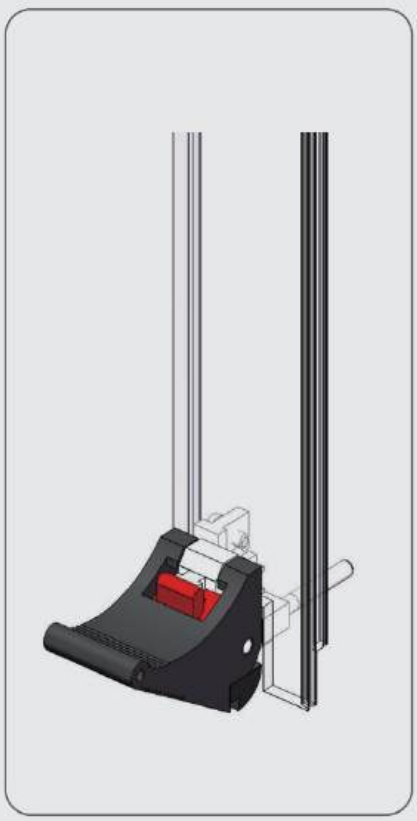

Static handle specification

瑞德科诺 RDEKON

Handle

T04 Handle

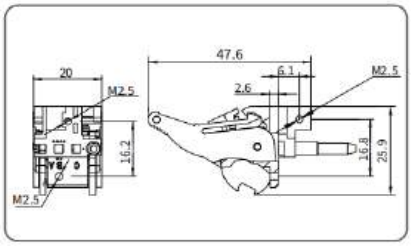

Order information

Order no	Name	Model	color	Colour code
1002020	Handle	T04 (Top)	Black handle+red button	RAL9011+RAL3031
1002021	Handle	T04 (Bottom)	Black handle+red button	RAL9011+RAL3031

T04 Handle

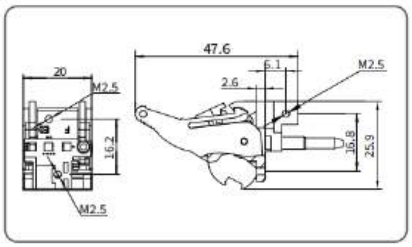

Order no	Name	Model	color	Colour code
1002511	Handle	T04 (Top)	Grey handle+red button	RAL7035+RAL3031
1002512	Handle	T04 (Bottom)	Grey handle+red button	RAL7035+RAL3031

Product description

- Suitable for flat panel/U-shaped panel
- For PCB board insertion and extraction
- Use with front rails with square hole
- Optional micro switch for hot-swapping
- Codable to realize anti-insertion function
- Compliant with IEEE1101.10 standard

Performance description

- High-temperature aging standard: GB/T7141-2008,,90°C, 6h
- Low temperature embrittlement standard: GB/T5470-2008, -55°C
- Fire retardant standard: UL94V-0, EN45545-2
- Fire resistance standard: EN 45545-2:2013+A1:2015(E)
- ROHS standard: 2011/65/EU

Material and finish

- Plastic: PC+20% GF, zinc alloy nickel plated

Cut-Size

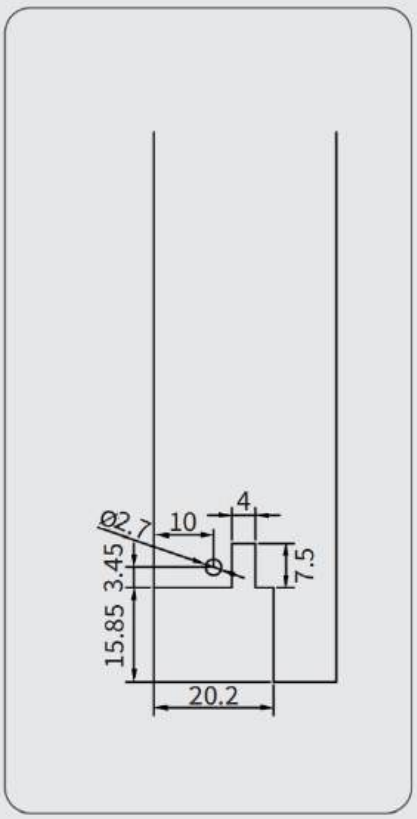

Schematic

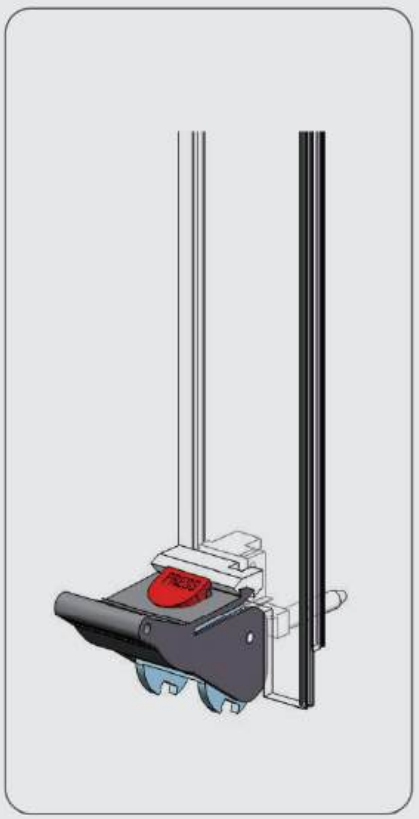

Static handle specification

Handle

T06/T07 Handle

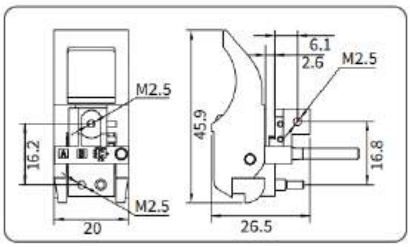

Order information

Order no	Name	Model	color	Colour code
1002028	Handle	T06 (Top)	Black handle+red button	RAL9011+RAL3031
1002029	Handle	T06 (Bottom)	Black handle+red button	RAL9011+RAL3031
1002412	Handle	T06 (Top)	Grey handle+red button	RAL7035+RAL3031
1002413	Handle	T06 (Bottom)	Grey handle+red button	RAL7035+RAL3031

T06/T07 Handle

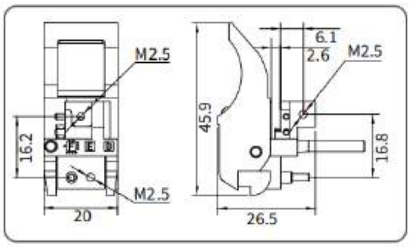

Order no	Name	Model	color	Colour code
1002032	Handle	T07 (Top)	Black handle+dark red button	RAL9011+RAL3007
1002033	Handle	T07 (Bottom)	Black handle+dark red button	RAL9011+RAL3007
1002410	Handle	T07 (Top)	Grey handle+dark red button	RAL7035+RAL3007
1002411	Handle	T07 (Bottom)	Grey handle+dark red button	RAL7035+RAL3007

Product description

- Suitable for flat panel/U-shaped panel
- For PCB board insertion and extraction
- Use with front rails with square hole
- Optional micro switch for hot-swapping
- Codable to realize anti-insertion function
- Compliant with IEEE1101.10 standard

Performance description

- High-temperature aging standard: GB/T7141-2008,,90°C, 6h
- Low temperature embrittlement standard: GB/T5470-2008, -55°C
- Fire retardant standard: UL94V-0, EN45545-2
- Fire resistance standard: EN 45545-2:2013+A1:2015(E)
- ROHS standard: 2011/65/EU

Material and finish

- Plastic: PC+20% GF, zinc alloy nickel plated
- Plastic: PC+20% GF, zinc alloy nickel plated

Cut-SIze

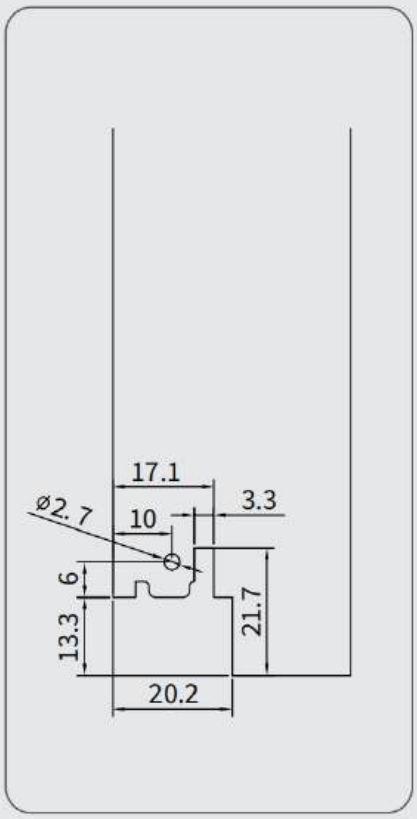

Schematic

Static handle specification

Handle

T08 Handle

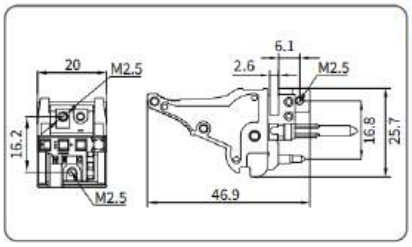

Order information

Order no	Name	Model	color	Colour code
1002034	Handle	T08 (Top)	Black handle+grey button	RAL9011+RAL7035
1002035	Handle	T08 (Bottom)	Black handle+grey button	RAL9011+RAL7035
1002036	Handle	T08 (Top)	Black handle+red button	RAL9011+RAL3031
1002037	Handle	T08 (Bottom)	Black handle+red button	RAL9011+RAL3031

T19 Handle

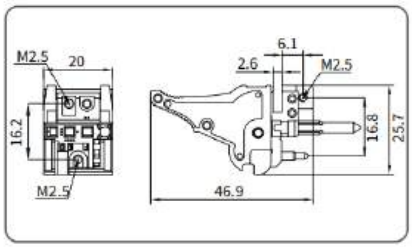

Order no	Name	Model	color	Colour code
1002052	Handle	T19 (Top)	Grey handle+Black button	RAL7035+RAL9011
1002053	Handle	T19 (Bottom)	Grey handle+Black button	RAL7035+RAL9011

Product description

- Suitable for flat panel/U-shaped panel
- For PCB board insertion and extraction
- Use with front rails with square hole
- Optional micro switch for hot-swapping
- Codable to realize anti-insertion function
- Compliant with IEEE1101.10 standard

Performance description

- High-temperature aging standard: GB/T7141-2008,,90°C, 6h
- Low temperature embrittlement standard: GB/T5470-2008, -55°C
- Fire retardant standard: UL94V-0, EN45545-2
- Fire resistance standard: EN 45545-2:2013+A1:2015(E)
- ROHS standard: 2011/65/EU

Material and finish

- Plastic: PC+20% GF, zinc alloy nickel plated
- Plastic: PC+20% GF, zinc alloy nickel plated

Cut-SIze

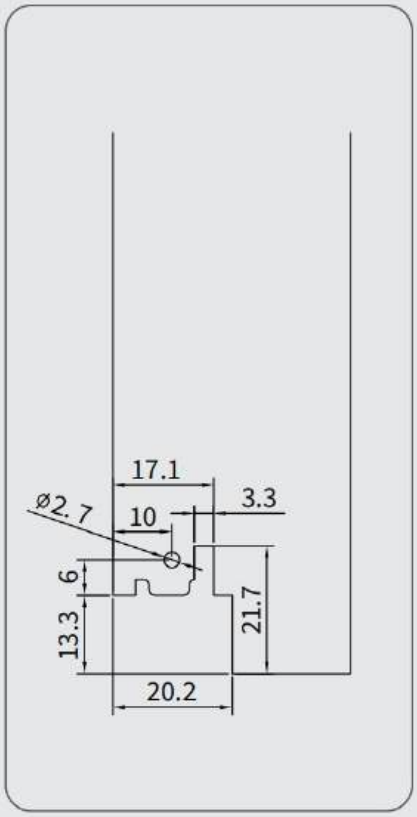

Schematic

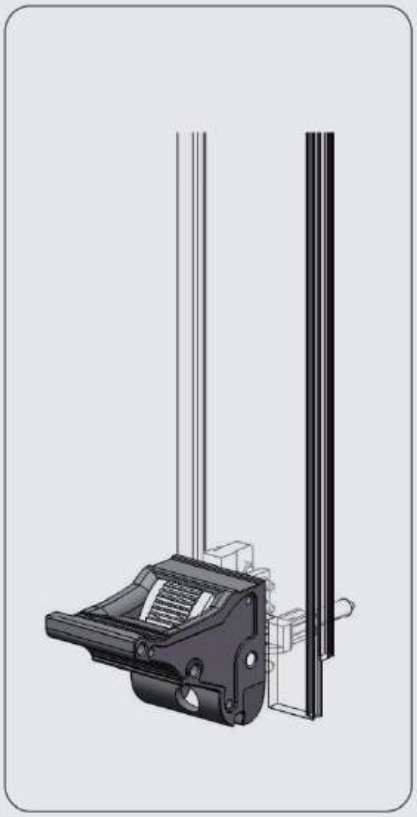

Static handle specification

瑞德科诺 RDEKON

Handle

T17 Handle

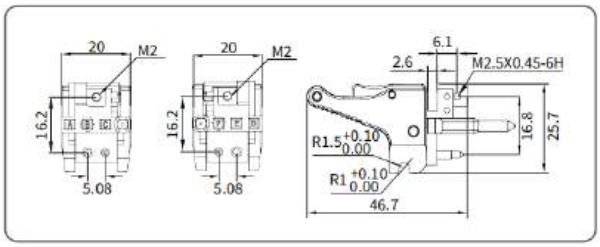

Order information

Order no	Name	Model	color
1002513	Handle	T17(Top)	Black
1002514	Handle	T17(Bottom)	Black

Product description

- Suitable for flat panel/U-shaped panel
- For PCB board insertion and extraction
- Used in conjunction with square hole front beam/J-shaped front beam
- Optional micro switch for hot-swapping
- Codable to realize anti-insertion function
- Compliant with IEEE1101.10 standard
- Utility model patent: ZL202422812519.1
- Design Patent: 2ZL20243705361.0

Performance description

- Durable and corrosion-resistant, extending lifespan, anti-aging, and improving reliability
- Powder metallurgy technology ensures high precision and high quality
- Satisfy high-strength insertion and extraction torque
- Stable insertion and removal, reducing failures, and improving performance
- Reduce maintenance costs, achieve high recycling rates, and promote environmental protection
- ROHS standard: 2011/65/EU

Material and finish

- 316 stainless steel coating+zinc alloy nickel plating

Cut-Size

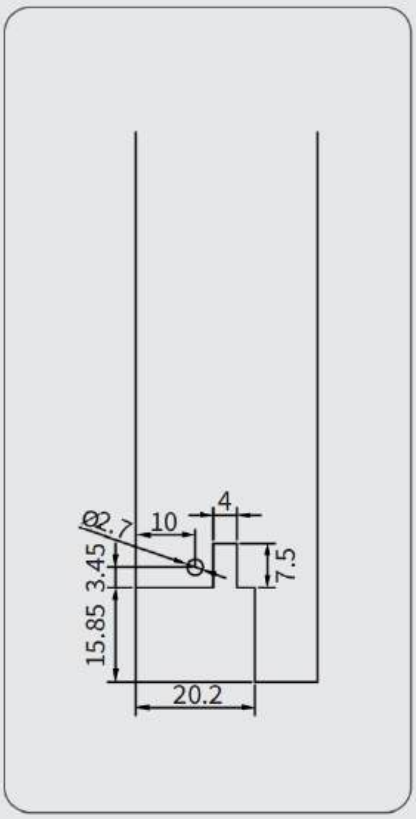

Schematic

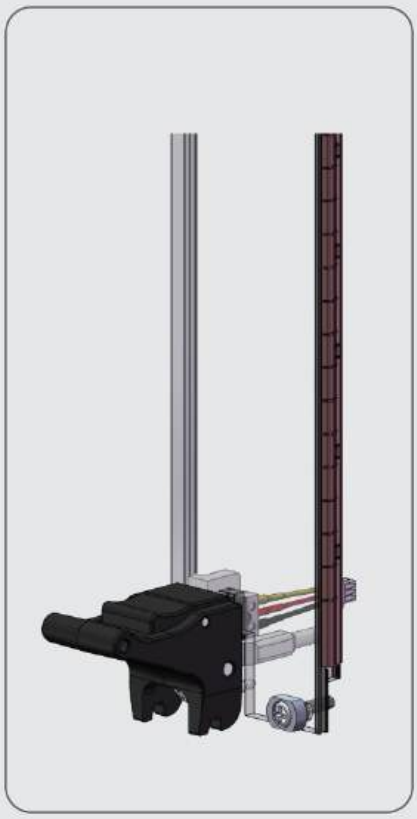

Static handle specification

瑞德科诺 RDEKON

Handle

T21 Handle

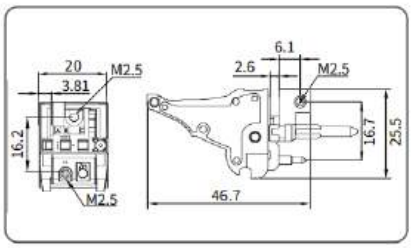

Order information

Order no	Name	Model	color	Colour code
1002034	Handle	T21(Top)	Black handle	RAL9011
1002035	Handle	T21(Bottom)	Black handle	RAL9011
1002036	Handle	T21(Top)	Black handle	RAL9011
1002037	Handle	T21(Bottom)	Black handle	RAL9011

T21 Handle

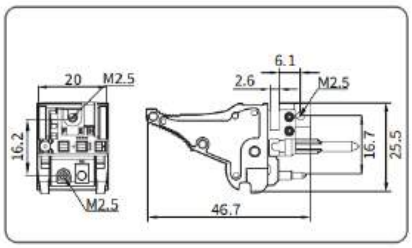

Product description

- Suitable for flat/U-shaped panels
- Used for inserting and removing PCB boards
- Used in conjunction with square hole front beam/J-shaped front beam
- Micro switches can be selected to achieve hot plugging
- Encodeable to achieve anti insertion error function
- Compliant with IEEE 1101.10 standard
- The specification and model are standard models without buttons

Performance description

- High-temperature aging standard: GB/T7141-2008,,90°C, 6h
- Low temperature embrittlement standard: GB/T5470-2008, -55°C
- Fire retardant standard: UL94V-0, EN45545-2
- Fire resistance standard: EN 45545-2:2013+A1:2015(E)
- ROHS standard: 2011/65/EU

Material and finish

- Plastic: PC+20% GF, zinc alloy nickel plated

Cut-Size

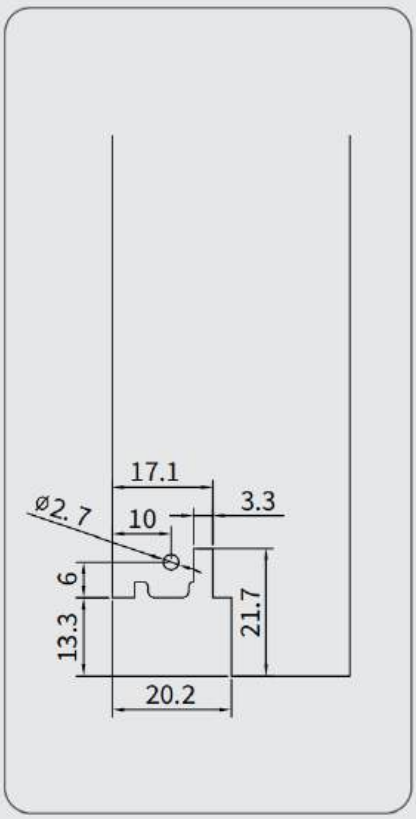

Schematic

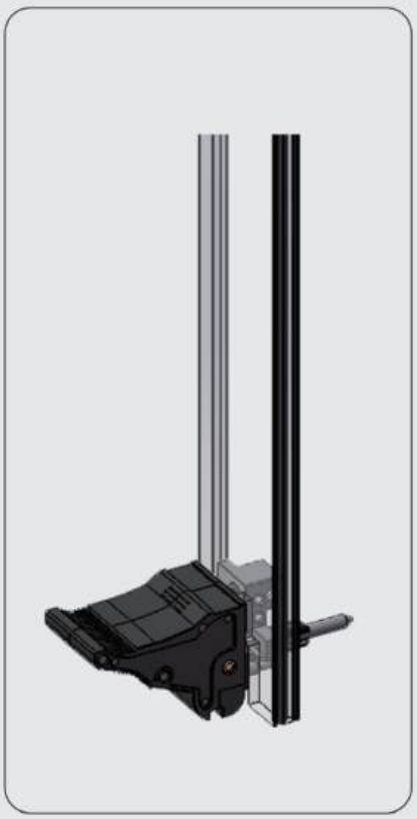

Static handle specification

瑞德科诺 RDEKON

Handle

T46 Handle

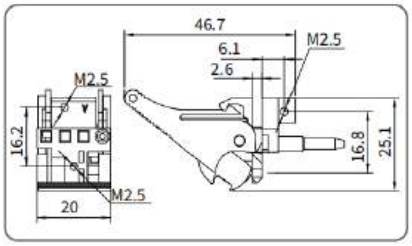

T46 Handle

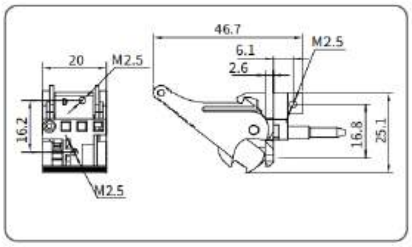

Order information

Order no	Name	Model	Color	Colour code
1002326	Handle	T46(Top)	Black	RAL9011
1002056	Handle	T46(Bottom)	Black	RAL9011
1002518	Handle	T46(Top)	Grey	RAL7047
1002519	Handle	T46(Bottom)	Grey	RAL7047

Product description

- Suitable for flat panel/U-shaped panel
- For PCB board insertion and extraction
- Use with front rails with square hole
- Optional micro switch for hot-swapping
- Codable to realize anti-insertion function
- Compliant with IEEE1101.10 standard

Performance description

- High-temperature aging standard: GB/T7141-2008,,90°C, 6h
- Low temperature embrittlement standard: GB/T5470-2008, -55°C
- Fire retardant standard: UL94V-0, EN45545-2
- Fire resistance standard: EN 45545-2:2013+A1:2015(E)
- ROHS standard: 2011/65/EU

Material and finish

- PC+20% GF; zinc alloy nickel plated
- PC+20% GF; zinc alloy nickel plated

Cut-Size

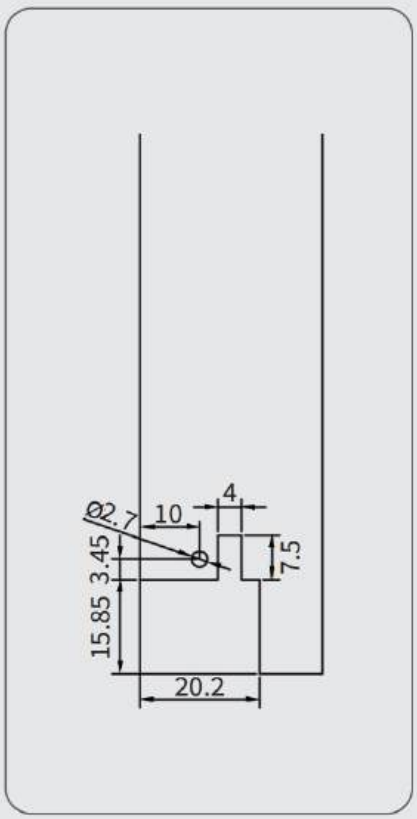

Schematic

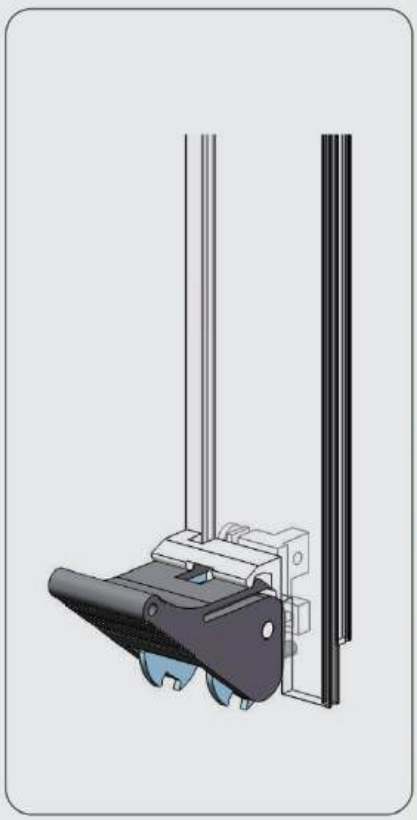

Static handle specification

Handle

T47 Handle

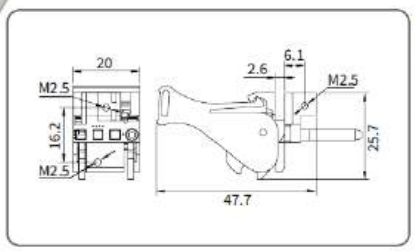

T47 Handle

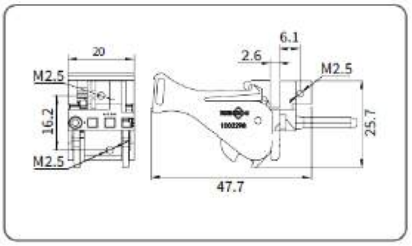

Order information

Order no	Name	Model	Color	Colour code
1002327	Handle	T47 (Top)	Yellow Handle	RGB (251,197,0)
1002328	Handle	T47 (Bottom)	Yellow Handle	RGB (251,197,0)
1002331	Handle	T47 (Top)	Green Handle	RGB (0,255,0)
1002332	Handle	T47 (Bottom)	Green Handle	RGB (0,255,0)
1002335	Handle	T47 (Top)	Blue Handle	RGB (35,41,108)
1002336	Handle	T47 (Bottom)	Blue Handle	RGB (35,41,108)

Product description

- Suitable for flat panel/U-shaped panel
- For PCB board insertion and extraction
- Use with front rails with square hole
- Optional micro switch for hot-swapping
- Codable to realize anti-insertion function
- Compliant with IEEE1101.10 standard

Performance description

- High-temperature aging standard: GB/T7141-2008,,90°C, 6h
- Low temperature embrittlement standard: GB/T5470-2008, -55°C
- Fire retardant standard: UL94V-0, EN45545-2
- Fire resistance standard: EN 45545-2:2013+A1:2015(E)
- ROHS standard: 2011/65/EU

Material and finish

- PC+20% GF; zinc alloy nickel plated
- PC+20% GF; zinc alloy nickel plated

Cut-Size

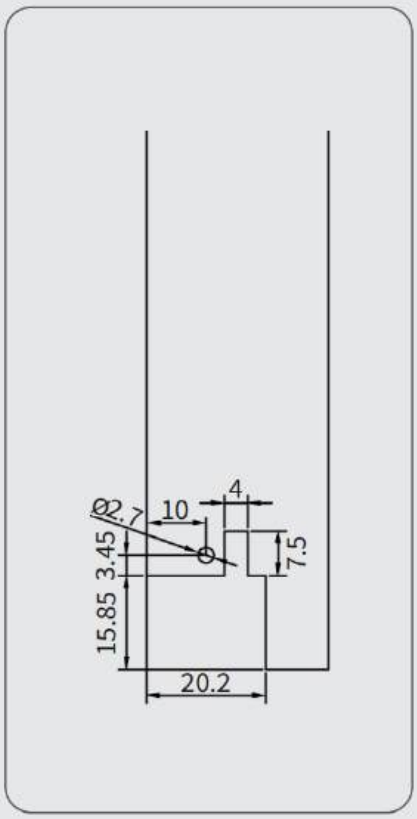

Schematic

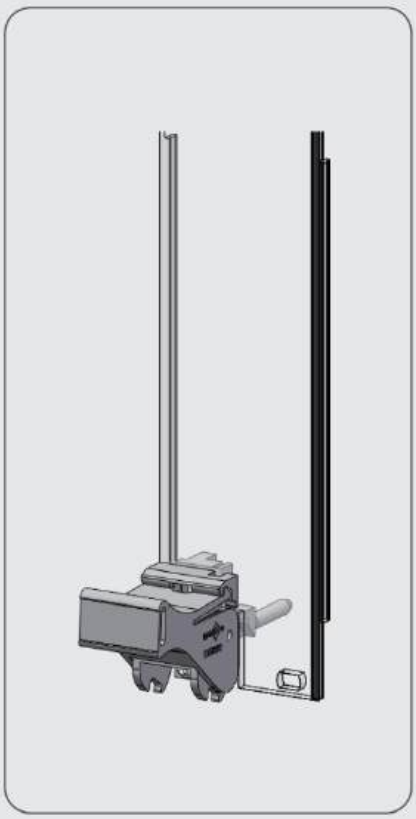

Static handle specification

Handle offset 0.1"

T01/T02 Offset Handle

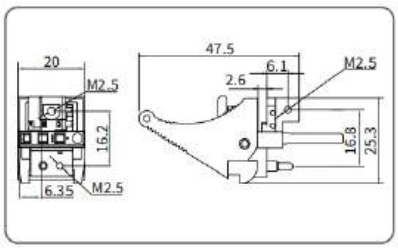

Order information

Order no	Name	Model	Color	Colour code
1002386	Handle	T01 Offset (Top)	Black handle+red button	RAL9011+RAL3031
1002387	Handle	T01 Offset (Bottom)	Black handle+red button	RAL9011+RAL3031
1002388	Handle	T01 Offset(Top)	Grey handle+red button	RAL7035+RAL3031
1002389	Handle	T01 Offset (Bottom)	Grey handle+red button	RAL7035+RAL3031

T01/T02 Offset Handle

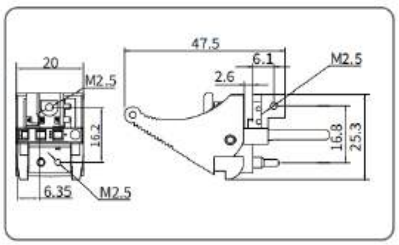

Order no	Name	Model	Color	Colour code
1002390	Handle	T02 Offset (Top)	Black handle+dark red button	RAL9011+RAL3007
1002391	Handle	T02 Offset (Bottom)	Black handle+dark red button	RAL9011+RAL3007
1002392	Handle	T02 Offset (Top)	Grey handle+dark red button	RAL7035+RAL3007
1002393	Handle	T02 Offset (Bottom)	Grey handle+dark red button	RAL7035+RAL3007

Product description

- Suitable for flat panel/U-shaped panel
- For PCB board insertion and extraction
- Use with front rail with square hole
- Optional micro switch for hot-swapping
- Codable to realize anti-insertion function
- Offset 2.54 to the right for power card panels
- Compliant with IEEE1101.10 standard

Performance description

- High-temperature aging standard: GB/T7141-2008,,90°C, 6h
- Low temperature embrittlement standard: GB/T5470-2008, -55°C
- Fire retardant standard: UL94V-0, EN45545-2
- Fire resistance standard: EN 45545-2:2013+A1:2015(E)
- ROHS standard: 2011/65/EU

Material and finish

- PC+20% GF; zinc alloy nickel plated
- PC+20% GF; zinc alloy nickel plated

Cut-SIze

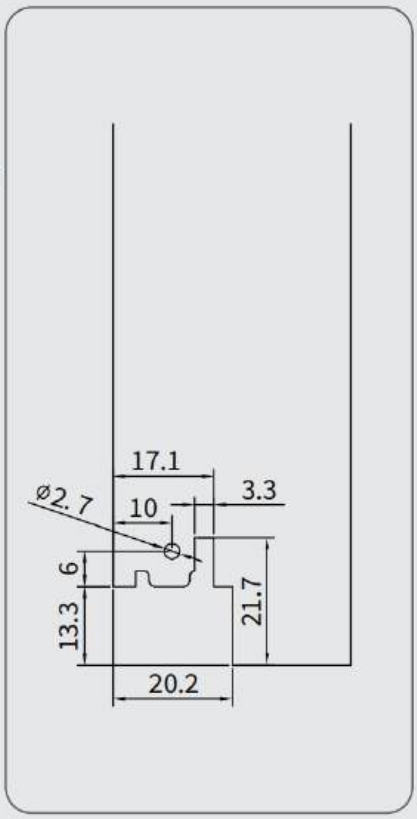

Schematic

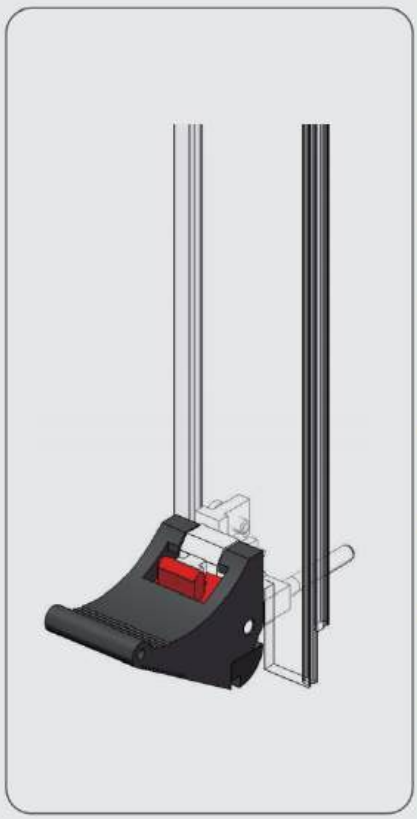

Static handle specification

瑞德科诺 RDEKON

Handle offset 0.1"

T04 Offset handle

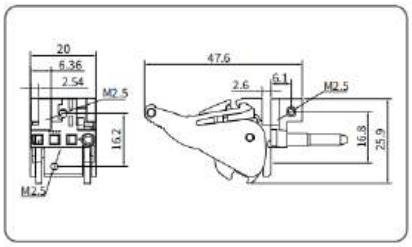

Order information

Order no	Name	Model	Color	Colour code
1002026	Handle	T04 Offset(Top)	Black handle+red button	RAL9011+RAL3031
1002027	Handle	T04 Offset(Bottom)	Black handle+red button	RAL9011+RAL3031

T04 Offset handle

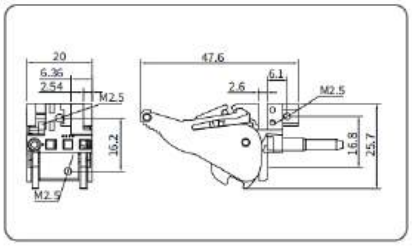

Order no	Name	Model	Color	Colour code
1002382	Handle	T04 Offset (Top)	Grey handle+red button	RAL7035+RAL3031
1002383	Handle	T04 Offset (Bottom)	Grey handle+red button	RAL7035+RAL3031

Product description

- Suitable for flat panel/U-shaped panel
- For PCB board insertion and extraction
- Use with front rail with square hole
- Optional micro switch for hot-swapping
- Codable to realize anti-insertion function
- Offset 2.54 to the right for power card panels
- Compliant with IEEE1101.10 standard

Performance description

- High-temperature aging standard: GB/T7141-2008,,90°C, 6h
- Low temperature embrittlement standard: GB/T5470-2008, -55°C
- Fire retardant standard: UL94V-0, EN45545-2
- Fire resistance standard: EN 45545-2:2013+A1:2015(E)
- ROHS standard: 2011/65/EU

Material and finish

- PC+20% GF; zinc alloy nickel plated

Cut-Size

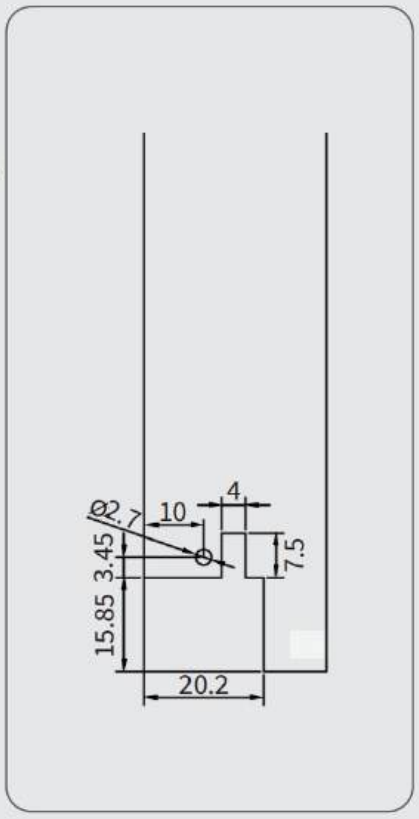

Schematic

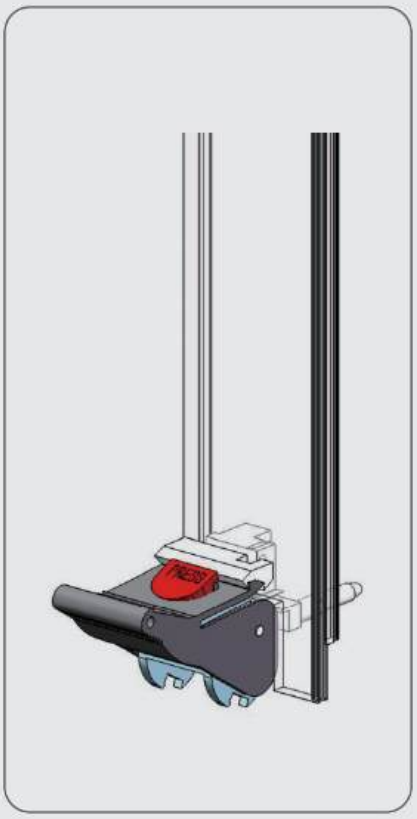

Static handle specification

瑞德科诺 RDEKON

Handle offset 0.1"

T06/T07 Offset Handle

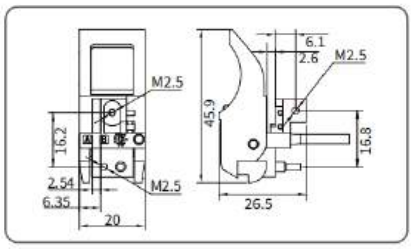

Order information

Order no	Name	Model	Color	Colour code
1002030	Handle	T06 Offset(Top)	Black handle+red button	RAL9011+RAL3031
1002031	Handle	T06 Offset(Bottom)	Black handle+red button	RAL9011+RAL3031
1002406	Handle	T06 Offset(Top)	Grey handle+red button	RAL7035+RAL3031
1002407	Handle	T06 Offset(Bottom)	Grey handle+red button	RAL7035+RAL3031

T06/T07 Offset Handle

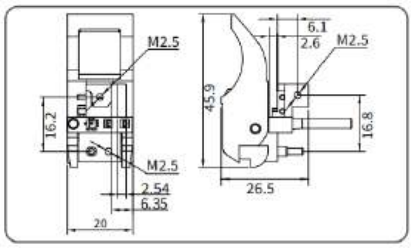

Order no	Name	Model	Color	Colour code
1002384	Handle	T07 Offset (Top)	Black handle+dark red button	RAL9011+RAL3007
1002385	Handle	T07 Offset (Bottom)	Black handle+dark red button	RAL9011+RAL3007
1002408	Handle	T07 Offset (Top)	Grey handle+dark red button	RAL7035+RAL3007
1002409	Handle	T07 Offset (Botom)	Grey handle+dark red button	RAL7035+RAL3007

Product description

- Suitable for flat panel/U-shaped panel
- For PCB board insertion and extraction
- Use with front rail with square hole
- Optional micro switch for hot-swapping
- Codable to realize anti-insertion function
- Offset 2.54 to the right for power card panels
- Compliant with IEEE1101.10 standard

Performance description

- High-temperature aging standard: GB/T7141-2008,,90°C, 6h
- Low temperature embrittlement standard: GB/T5470-2008, -55°C
- Fire retardant standard: UL94V-0, EN45545-2
- Fire resistance standard: EN 45545-2:2013+A1:2015(E)
- ROHS standard: 2011/65/EU

Material and finish

- PC+20% GF; zinc alloy nickel plated
- PC+20% GF; zinc alloy nickel plated

Cut-Size

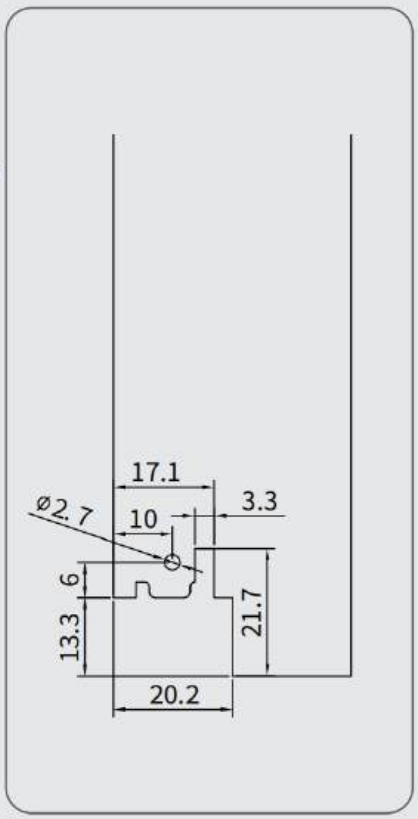

Schematic

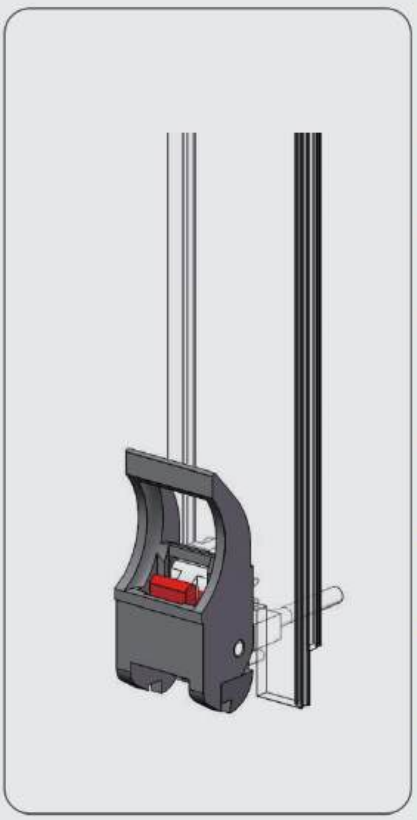

Static handle specification

瑞德科诺 RDEKON

Handle offset 0.1"

T08 Offset Handle

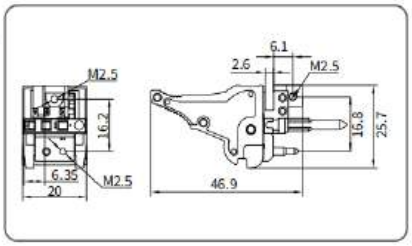

Order information

Order no	Name	Model	Color	Colour code
1002396	Handle	T08 Offset(Top)	Black handle+grey button	RAL9011+RAL7035
1002397	Handle	T08 Offset(Bottom)	Black handle+grey button	RAL9011+RAL7035
1002394	Handle	T08 Offset(Top)	Black handle+red button	RAL9011+RAL3031
1002395	Handle	T08 Offset(Bottom)	Black handle+red button	RAL9011+RAL3031

T19 Offset Handle

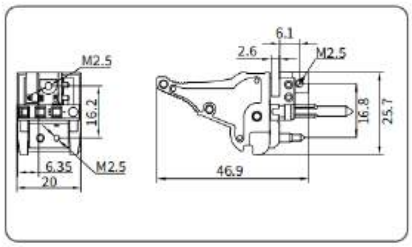

Order no	Name	Model	color	Colour code
1002416	Handle	T19 Offset(Top)	Grey handle+Black button	RAL7035+RAL9011
1002417	Handle	T19 Offset(Bottom)	Grey handle+Black button	RAL7035+RAL9011

Product description

- Suitable for flat panel/U-shaped panel
- For PCB board insertion and extraction
- Use with front rail with square hole
- Optional micro switch for hot-swapping
- Codable to realize anti-insertion function
- Offset 2.54 to the right for power card panels
- Compliant with IEEE1101.10 standard

Performance description

- High-temperature aging standard: GB/T7141-2008,,90°C, 6h
- Low temperature embrittlement standard: GB/T5470-2008, -55°C
- Fire retardant standard: UL94V-0, EN45545-2
- Fire resistance standard: EN 45545-2:2013+A1:2015(E)
- ROHS standard: 2011/65/EU

Material and finish

- PC+20% GF; zinc alloy nickel plated
- PC+20% GF; zinc alloy nickel plated

Cut-SIze

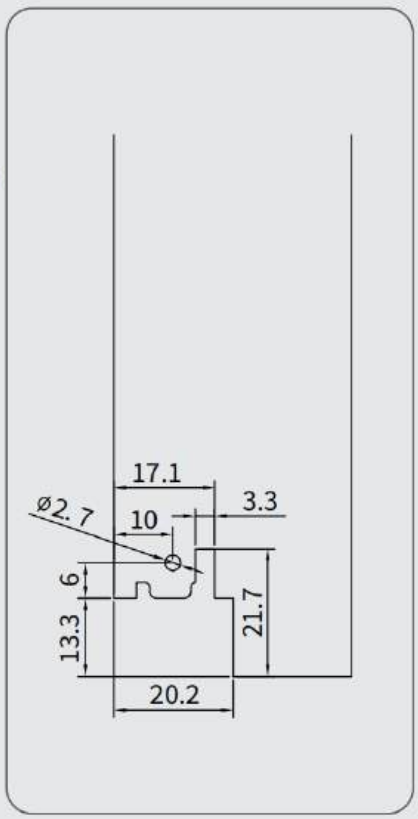

Schematic

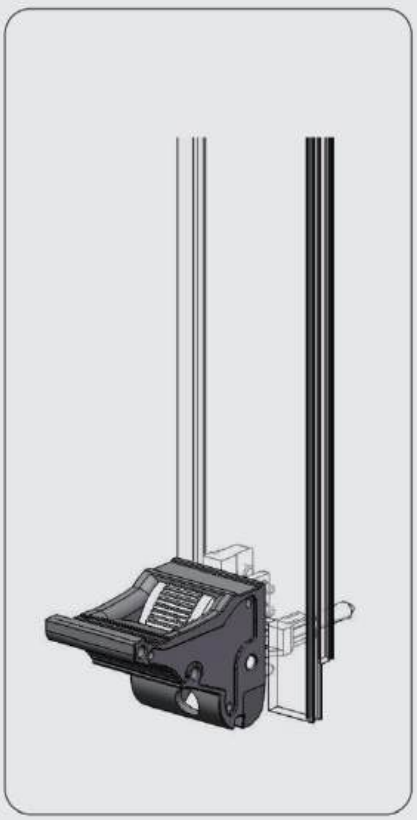

Static handle specification

Handle offset 0.1"

T21 Offset Handle

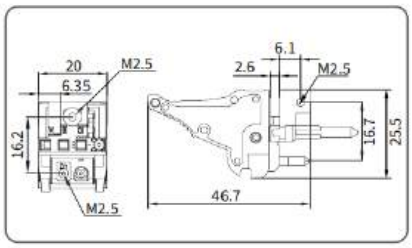

Order information

Order no	Name	Model	Color	Colour code
1002525	Handle	T21 Offset(Top)	Black handle	RAL9011
1002526	Handle	T21 Offset(Bottom)	Black handle	RAL9011
1002531	Handle	T21 Offset(Top)	Black handle	RAL9011
1002532	Handle	T21 Offset(Bottom)	Black handle	RAL9011

T21 Offset Handle

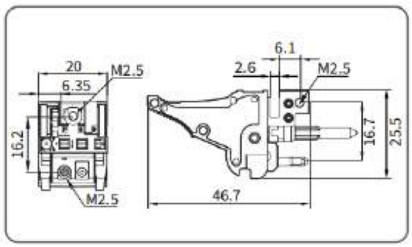

Product description

- Suitable for flat/U-shaped panels
- Used for inserting and removing PCB boards
- Used in conjunction with square hole front beam/J-shaped front beam
- Micro switches can be selected to achieve hot plugging
- Encodeable to achieve anti insertion error function
- Compliant with IEEE 1101.10 standard
- The specification and model are offset by 0.1 inches and have no buttons

Performance description

- High-temperature aging standard: GB/T7141-2008,,90°C, 6h
- Low temperature embrittlement standard: GB/T5470-2008, -55°C
- Fire retardant standard: UL94V-0, EN45545-2
- Fire resistance standard: EN 45545-2:2013+A1:2015(E)
- ROHS standard: 2011/65/EU

Material and finish

- Plastic: PC+20% GF, zinc alloy nickel plated

Cut-Size

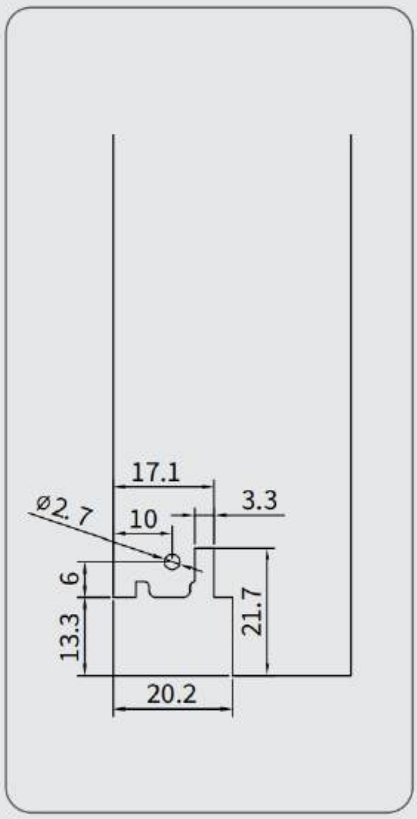

Schematic

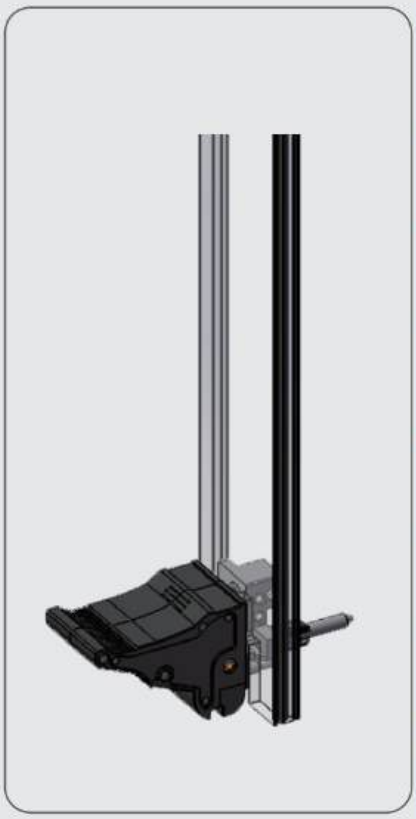

Static handle specification

瑞德科诺 RDEKON

Handle offset 0.1"

T47 Offset handle

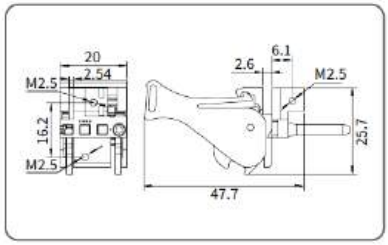

T47 Offset handle

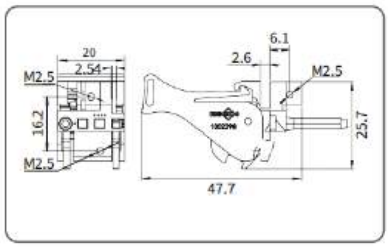

Order information

Order no	Name	Model	Color	Colour code
1002329	Handle	T47Offset (Top)	Yellow Handle	RGB (251,197,0)
1002330	Handle	T47Offset (Bottom)	Yellow Handle	RGB (251,197,0)
1002333	Handle	T47Offset (Top)	Green Handle	RGB (0,255,0)
1002334	Handle	T47Offset (Bottom)	Green Handle	RGB (0,255,0)
1002337	Handle	T47Offset (Top)	Blue Handle	RGB (35,41,108)
1002338	Handle	T47Offset (Bottom)	Blue Handle	RGB (35,41,108)

Product description

- Suitable for flat panel/U-shaped panel
- For PCB board insertion and extraction
- Use with front rail with square hole
- Optional micro switch for hot-swapping
- Codable to realize anti-insertion function
- Offset 2.54 to the right for power card panels
- Compliant with IEEE1101.10 standard

Performance description

- High-temperature aging standard: GB/T7141-2008,,90°C, 6h
- Low temperature embrittlement standard: GB/T5470-2008, -55°C
- Fire retardant standard: UL94V-0, EN45545-2
- Fire resistance standard: EN 45545-2:2013+A1:2015(E)
- ROHS standard: 2011/65/EU

Material and finish

- PC+20% GF; zinc alloy nickel plated

Cut-Size

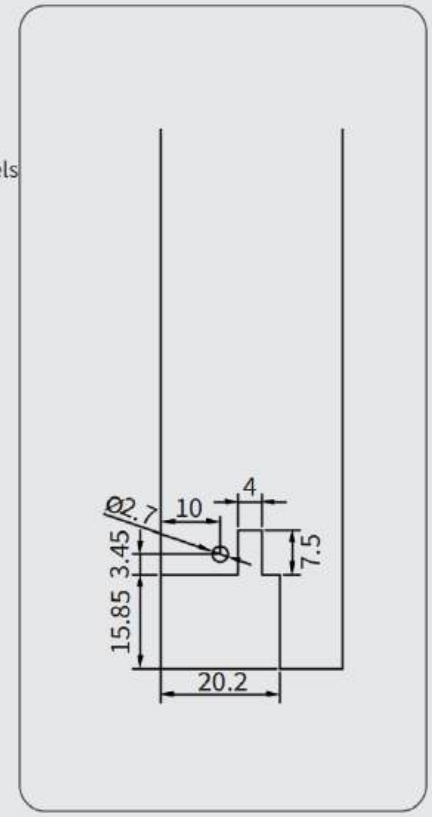

Schematic

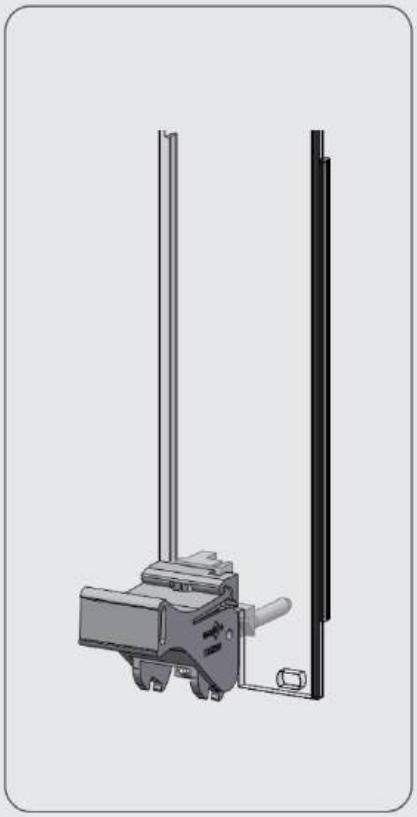

Static handle specification

瑞德科诺 RDEKON

Handle

F03 Handle

F03 Handle

IV Handle

IV Handle

Product description

- Suitable for flat panel/U-shaped panel
- For PCB board insertion and extraction
- Compliant with IEEE1101.10 standard

Performance description

- High-temperature aging standard: GB/T7141-2008,,90°C, 6h
- Low temperature embrittlement standard: GB/T5470-2008, -55°C
- Fire retardant standard: UL94V-0, EN45545-2
- Fire resistance standard: EN 45545-2:2013+A1:2015(E)
- ROHS standard: 2011/65/EU

Material and finish

Plastic: PC+20% GF; zinc alloy nickel plated

Order information

Order no	Name	Model	Color	Colour code
1002061	Handle	F03(上)	Black	RAL9011
1002061	Handle	F03(下)	Black	RAL9011
1002062	Handle	F03(上)	Grey	RAL7035
1002062	Handle	F03(下)	Grey	RAL7035

Product description

- Suitable for flat panel/U-shaped panel
- For PCB board insertion and extraction
- For use with front rail with square holes
- Compliant with IEEE1101.10 standard

Performance description

- High-temperature aging standard: GB/T7141-2008,,90°C, 6h
- Low temperature embrittlement standard: GB/T5470-2008, -55°C
- Fire retardant standard: UL94V-0, EN45545-2
- Fire resistance standard: EN 45545-2:2013+A1:2015(E)
- ROHS standard: 2011/65/EU

Material and finish

Plastic: PC+20% GF; zinc alloy nickel plated

Order information

Order no	Name	Model	Color	Colour code
1002428	Handle	IV Type (Top)	Black	RAL9011
1002429	Handle	IV Type (Bottom)	Black	RAL9011
1002430	Handle	IV Type (Top)	Grey	RAL7035
1002431	Handle	IV Type (Bottom)	Grey	RAL7035

Static handle specification

瑞德科诺 RDEKON

Handle

T11 Handle

T11 Handle

Product description

- Suitable for flat panel/U-shaped panel
- For PCB board insertion and extraction
- Optional micro switch for hot-swapping
- Compliant with IEEE1101.10 standard
- There are two specifications: standard model and offset of 0.1 inch

Performance description

- High-temperature aging standard: GB/T7141-2008,,90°C, 6h
- Low temperature embrittlement standard: GB/T5470-2008, -55°C
- Fire retardant standard: UL94V-0, EN45545-2
- Fire resistance standard: EN 45545-2:2013+A1:2015(E)
- ROHS standard: 2011/65/EU

Material and finish

Plastic: PC+20% GF; zinc alloy nickel plated

Order information

Order no	Name	Model	Color	Colour code
1002044	Handle	T11 (Top)	Black handle+Grey button	RAL9011+RAL7035
1002045	Handle	T11 (Bottom)	Black handle+Grey button	RAL9011+RAL7035
1002046	Handle	T11 (Top)	Grey handle+Black button	RAL7035+RAL9011
1002047	Handle	T11 (Bottom)	Grey handle+Black button	RAL7035+RAL9011
1002440	Offset Handle	T11 (Top)	Grey handle+Black button	RAL7035+RAL9011
1002441	Offset Handle	T11 (Bottom)	Grey handle+Black button	RAL7035+RAL9011
1002442	Offset Handle	T11 (Top)	Black handle+Grey button	RAL9011+RAL7035
1002443	Offset Handle	T11 (Bottom)	Black handle+Grey button	RAL9011+RAL7035

Static handle specification

瑞德科诺 RDEKON

Handle

T14 Handle

T10 Handle

Product description

- Mostly used in telecom field
- For plugging and unplugging of high-density connectors
- Optional microswitch for hot-swapping
- For use with square-hole front rails
- Minimal space requirements through fold-up handle

Performance description

- High-temperature aging standard: GB/T7141-2008,,90°C, 6h
- Low temperature embrittlement standard: GB/T5470-2008, -55°C
- Fire retardant standard: UL94V-0, EN45545-2
- Fire resistance standard: EN 45545-2:2013+A1:2015(E)
- ROHS standard: 2011/65/EU

Material and finish

Zinc alloy nickel plated

Order information

Order no	Name	Model	Color	Colour code
1002422	Handle	T14(Top)	Natural color	-
1002423	Handle	T14(Bottom)	Natural color	-

Product description

- For flat panel/U-shaped panel
- For PCB board insertion and extraction
- Compliant with IEEE1101.10 standard

Performance description

- High-temperature aging standard: GB/T7141-2008,,90°C, 6h
- Low temperature embrittlement standard: GB/T5470-2008, -55°C
- Fire retardant standard: UL94V-0, EN45545-2
- Fire resistance standard: EN 45545-2:2013+A1:2015(E)
- ROHS standard: 2011/65/EU

Material and finish

Zinc alloy nickel plated

Order information

Order no	Name	Model	Color	Colour code
1002042	Handle	T10(Top)	Natural color	-
1002043	Handle	T10(Bottom)	Natural color	-

Static handle specification

瑞德科诺 RDEKON

Handle

T15 Handle

T16 Handle

Product description

- For flat panel/U-shaped panel
- For PCB board insertion and extraction
- Compliant with IEEE1101.10 standard

Performance description

- High-temperature aging standard: GB/T7141-2008,,90°C, 6h
- Low temperature embrittlement standard: GB/T5470-2008, -55°C
- Fire retardant standard: UL94V-0, EN45545-2
- Fire resistance standard: EN 45545-2:2013+A1:2015(E)
- ROHS standard: 2011/65/EU

Material and finish

Plastic: PC+20% GF; zinc alloy nickel plated

Order information

Order no	Name	Model	Color	Colour code
1002424	Handle	T15 (Top)	Black	RAL9011
1002425	Handle	T15 (Bottom)	Black	RAL9011
1002426	Handle	T15 (Top)	Grey	RAL7035
1002427	Handle	T15 (Bottom)	Grey	RAL7035

Product description

- Suitable for flat panel/U-shaped panel
- For PCB board insertion and extraction
- Optional micro switch for hot-swapping
- Compliant with IEEE1101.10 standard

Performance description

- High-temperature aging standard: GB/T7141-2008,,90°C, 6h
- Low temperature embrittlement standard: GB/T5470-2008, -55°C
- Fire retardant standard: UL94V-0, EN45545-2
- Fire resistance standard: EN 45545-2:2013+A1:2015(E)
- ROHS standard: 2011/65/EU

Material and finish

Plastic: PC+20% GF; zinc alloy nickel plated

Order information

Order no	Name	Model	Color	Colour code
1002432	Handle	T16 (Top)	Black handle+Aluminum button	RAL9011+Natural color
1002433	Handle	T16 (Bottom)	Black handle+Aluminum button	RAL9011+Natural color
1002434	Handle	T16 (Top)	Grey handle+Aluminum button	RAL7035+Natural color
1002435	Handle	T16 (Bottom)	Grey handle+Aluminum button	RAL7035+Natural color

Static handle specification

瑞德科诺 RDEKON

Handle Accessories

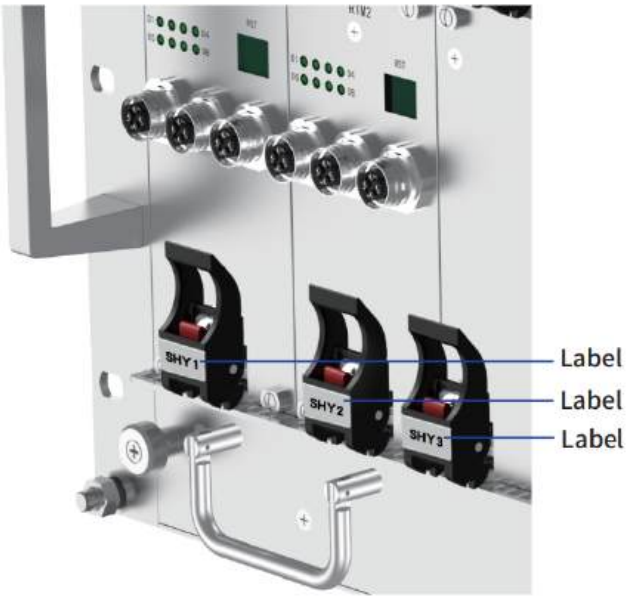

Handle Label

- Encoding and naming for the front panel
- Installed on the handle of the extractor, T-series extractor and I-series extractor
- Material: PVC
- Surface frosted or smooth surface
- Customers can customize coding and colors

Delivery Comprises

Handle Note	Length mm	Width mm	Thickness mm	Pieces/Package
Type I Handle	20	12	0.5	20
T01/T02 Handle	20	6	0.5	20
T04 Handle	20	6	0.5	20
T04 Handle	20	11	0.5	20
T06/T07 Handle	20	11	0.5	20
T08/T19 Handle	20	5.3	0.5	20

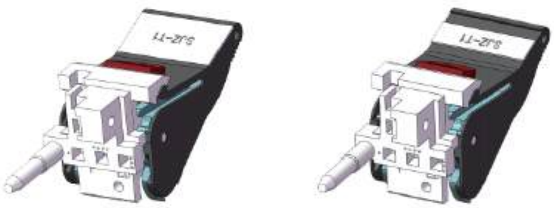

Schematic diagram of T04 handle label

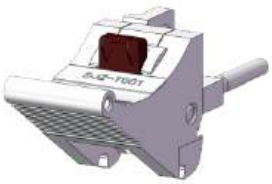

Schematic diagram of T01/T02 handle label

Schematic diagram of T08/T19 handle label

Schematic diagram of T06/T07 handle label

Schematic diagram of type I handle label

Static handle specification

Handle Accessories

Micro switch

- For hot swapping, can be installed in F-type, T-type handle
- Handle fixing screw M2.5×6

Order information

Description	Order no
Micro switch (Including microswitch and cable)	1031020

Technical specification

Max.switched current	>=50mA
Operating temperature	-25～70°C
Mechanical life	>=50000 switching cycles
Electrical life	>=20000 switching cycles
Molex connector housing	51021-0300
Molex crimp contact	50058-8000

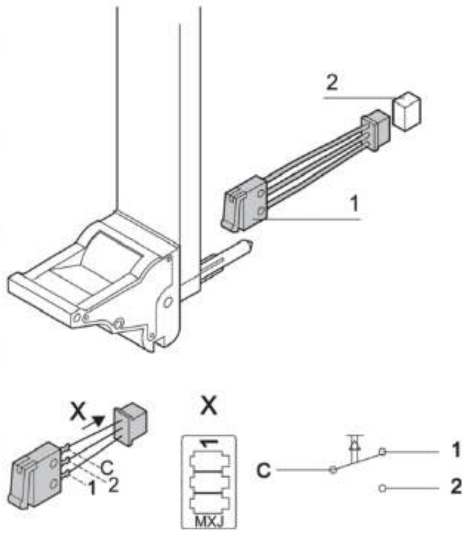

Micro switch

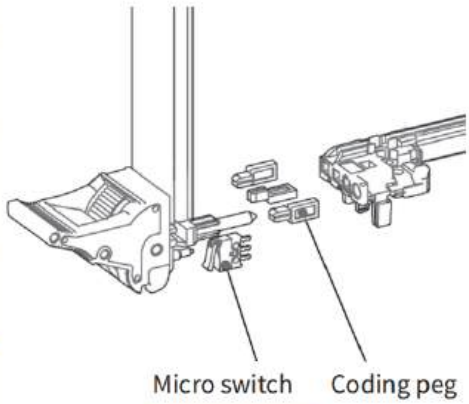

Coding peg

Coding peg

- The coding peg is mounted in the coding peg mounting hole of the extractor handle
- CompactPCI/VME64x applications

Order information

Description	Order no
Coding peg, PC,UL 94 V-0,Grey,RAL 7035	1009010
Coding peg, PC,UL 94 V-0,Red,RAL 3020	1009011

Static handle specification

Handle Accessories

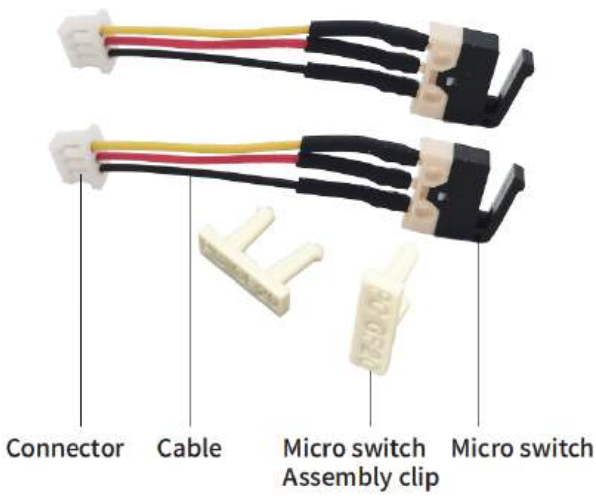

1 The handle is not pressed

2 The handle hinges

3 The handle contact

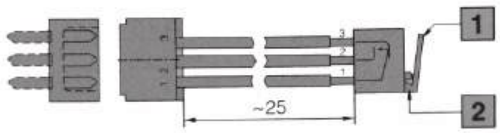

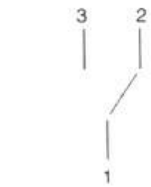

1-2 The Micro switch is pressed and the handle is in the locked position
1-3 The Micro switch is not pressed and the handle is not locked

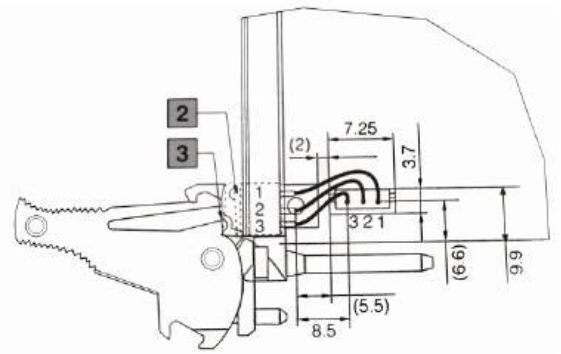

Micro switch

- For hot swapping
- Can be installed in F-type, T-type handle
- Micro switch fixing clips are only used in the T04 handle
- Material: PC+20%GF

Delivery Comprises(kit)

Name	Qty	Description
Micro switch	1	For hot swapping
Micro switch assembly clip	1	Fix the micro switch on the handle
Cable	3	Cables connecting circuits
Connector	1	Connection circuit

Order information

Order no	Name	Color	Colour code
1031020	Micro switch	Black	RAL9011
1031023	Micro switch assembly clip	Grey	RAL7032

Static handle specification

瑞德科诺 RDEKON

Printed board handle

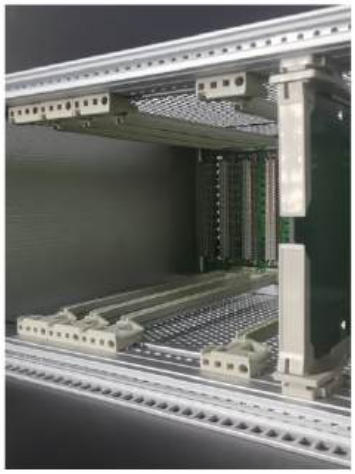

Product description

- Can be used to fix PCB boards without front panel
- Can be installed in the upper and lower rails of the subrack
- Can only be used with card holder and card guide, minimum distance between guides is 3HP
- Can be labeled or screen printed
- The bottom part can also be used separately as a fixed protection for plug-in cards

Performance description

- High-temperature aging standard: GB/T7141-2008,,90°C, 6h
- Low temperature embrittlement standard: GB/T5470-2008, -55°C
- Fire retardant standard: UL94V-0, EN45545-2
- Fire resistance standard: EN 45545-2:2013+A1:2015(E)
- ROHS standard: 2011/65/EU

Material and finish

- PC+20% GF

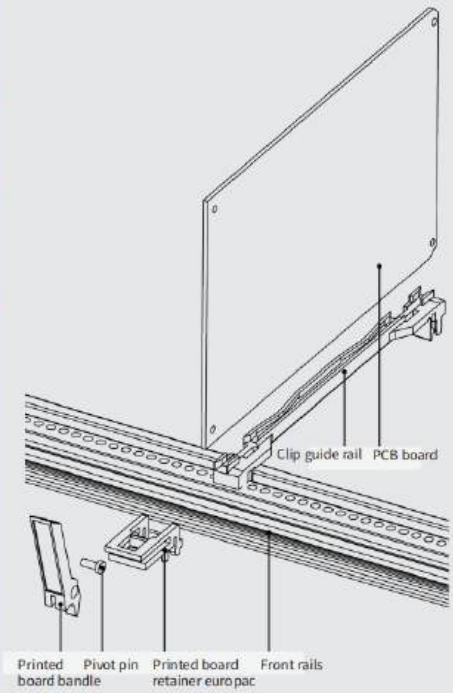

Delivery Comprises(kit)

Name	3U Qty	6U Qty	Order no	Description
Printed board handle(Top)	/	1	1002249	Only use printed board handle in conjunction with printed board retainer, The front side can be silkscreened
Printed board handle(Bottom)	1	1	1002250	Only use printed board handle in conjunction with printed board retainer, The front side can be silkscreened
Pivot pin	1	2	/	Parts matched with printed board bandle, PC+20%GF
Printed board retainer europac	2	2	1002309	Can also be used without printed board handle, RAL7032
Front rails	1	1	/	Used for installation of guide rail and fixing of Front panel
Clip guide rail	2	2	1001045	Used for 1.6-2.0mm thick PCB board, 160mm
Clip guide rail	2	2	1001044	Used for 1.6-2.0mm thick PCB board, 220mm

Static handle specification

C-type handle combination component

Printed Circuit Board C-Handle Assembly

- Printed circuit board C-type handle, can only be used in conjunction with PCB holder C-type
- PCB holder C-type, can be used for fixing PCB boards without front panels
- PCB holder C-type, can be installed on the upper and lower crossbeams of the subracks
- The component is only used in conjunction with B-type short end guide rails and B-type reinforced guide rails
- Can be used for BEK series chassis and BEG series subracks

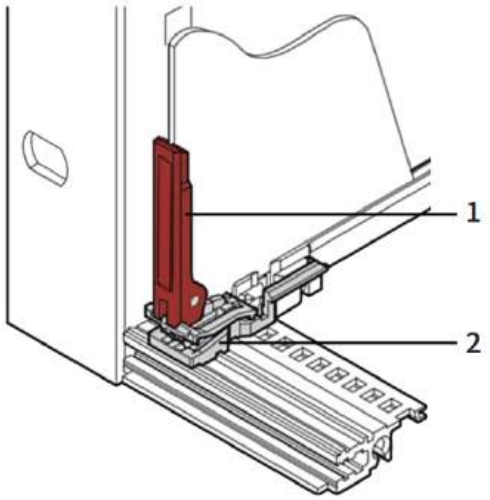

Order information

Ltem	Name	Material	Color	Order no
1	Printed circuit board C-handle	PBTP,UL94V-0	Red	1002363
2	PCB holder C-type	PPO,UL94V-0	Red	1002362

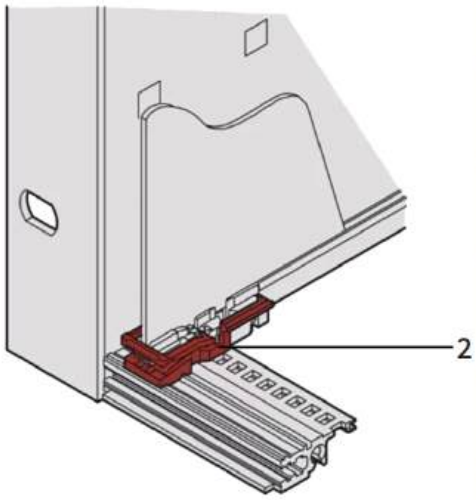

Installation dimensions

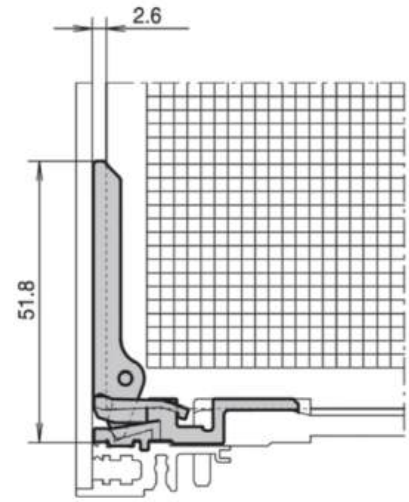

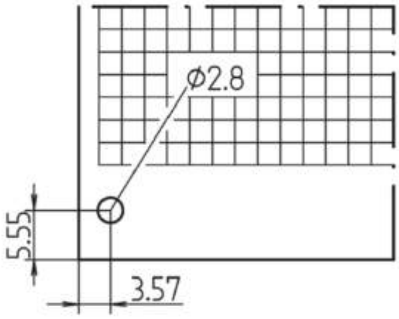

Static handle specification

V-Handle component

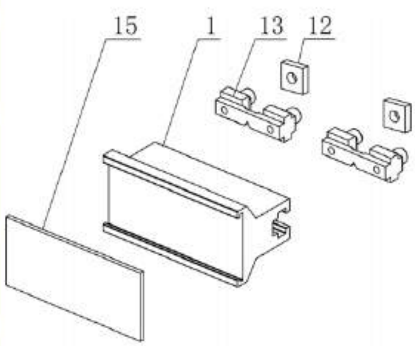

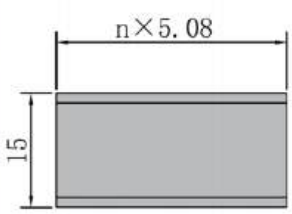

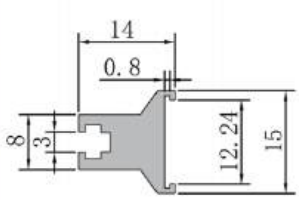

Delivery Comprises(kit)

Item	Name	Qty	Order no	Description
1	V-Handle	1	/	V-Handle,Al anodised
12	Square Nut	2	1005002	Square Nut,M2.5 Stainless steel
13	Plastic parts	2	1000066	Plastic parts, PC GF20% (7035)
15	Identification plate	1	/	Al, 1.5 mm, anodised,cut edges plain

Order information

HP Width	Square Nut Qty	Plastic parts Qty	Order no
4	1	1	04010201
5	1	1	05010201
6	2	2	06010202
7	2	2	07010202
8	2	2	08010302
9	2	2	09010303
10	2	2	10010303
11	2	2	11010303
12	2	2	12010404
13	2	2	13010404
14	2	2	14010505
15	2	2	15010505
16	2	2	16010505
17	2	2	17010606
18	2	2	18010606
19	2	2	19010606
20	2	2	20010707
21	2	2	21010707
22	2	2	22010707
23	2	2	23010808
24	2	2	24010808
25	2	2	25010808
26	2	2	26010909
27	2	2	27010909
28	2	2	28011010
1m	/	/	10017070

Screw Order information

Name	Qty/Up	Order no
Square Nut	1	1005002
Set screw	1	1004011
Plastic parts	1	1000066

Note:

- V handle can only be used with PCB fixed block (1015005, 1015004), PCB bracket (1015016)
- Screw: Cross pan head M2.5 x 6

Static handle specification

瑞德科诺 RDEKON

VI-Handle component

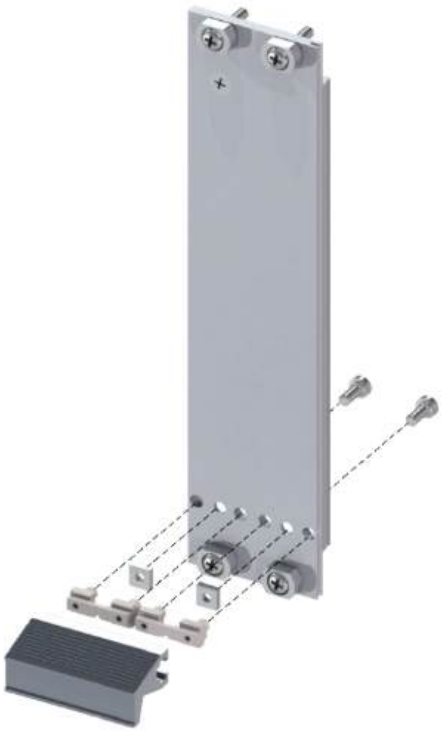

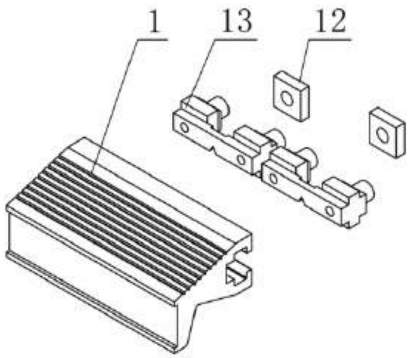

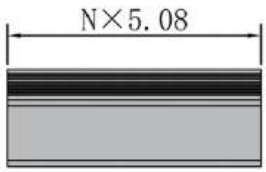

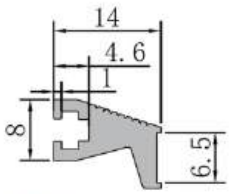

Delivery Comprises(kit)

Item	Name	Qty	Order no	Description
1	VI-handle	1	/	VI-handle,Al anodised
12	Square Nut	2	1005002	Square Nut, M2.5 Stainless steel
13	Plastic parts	2	1000066	Plastic parts, PC GF20% (7035)

Order information

HP Width	Square Nut Qty	Plastic parts Qty	Order no
4	1	1	04020201
5	1	1	05020201
6	2	2	06020202
7	2	2	07020202
8	2	2	08020302
9	2	2	09020303
10	2	2	10020303
11	2	2	11020303
12	2	2	12020404
13	2	2	13020404
14	2	2	14020505
15	2	2	15020505
16	2	2	16020505
17	2	2	17020606
18	2	2	18020606
19	2	2	19020606
20	2	2	20020707
21	2	2	21020707
22	2	2	22020707
23	2	2	23020808
24	2	2	24020808
25	2	2	25020808
26	2	2	26020909
27	2	2	27020909
28	2	2	28021010
1m	/	/	10027070

Screw Order information

Name	Qty/Up	Order no
Square Nut	1	1005002
Set screw	1	1004011
Plastic parts	1	1000066

Note:

- VI handle can only be used with PCB fixed block (1015005, 1015004), PCB bracket (1015016)
- Screw: Cross pan head M2.5 x 6

Static handle specification

V-shaped plastic handle B component

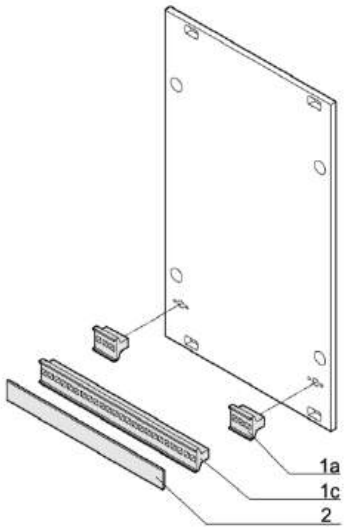

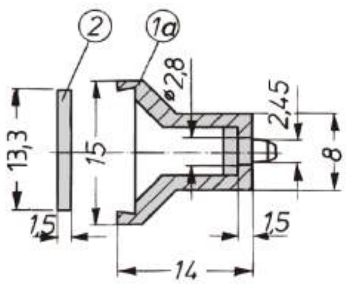

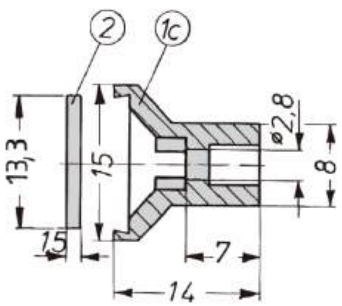

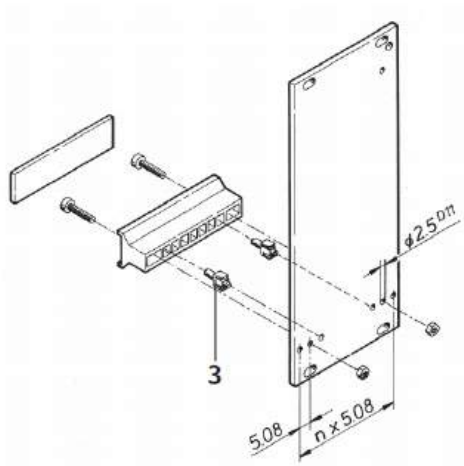

V-shaped plastic handle B

Delivery includes

Ltem	Name	Description
1a/1c	V-shaped plastic handle B	Fixed handle, PPE UL 94V-1,Grey or black
2	V-shaped plastic handle scutcheon	Handle label panel, aluminum, 1.5mm

Order information

Ltem	Width HP	Width mm	Order no Grey	Order no Black
1a	4	18.9	1030075	1030098
1c	5	24	1030085	1030099
1c	6	29	1030076	1030100
1c	7	34.1	1030089	1030101
1c	8	39.2	1030077	1030102
1c	10	49.4	1030086	1030103
1c	12	59.6	1030078	1030104
1c	14	69.7	1030087	1030105
1c	21	105.2	1030088	1030106

Order information

Ltem	Width HP	Order no
2	4	1025010
2	5	1030090
2	6	1030091
2	7	1030092
2	8	1030093
2	10	1030094
2	12	1030095
2	14	1030096
2	21	1030097

V-shaped plastic handle fixing pin

- Handle available for 5 HP to 21 HP
- For fixed plastic handle (1c)

Order information

Ltem	Name	Material	Color	Order no
3	V-shaped plastic handle fixing pin	PPE,UL94-0	Black	1030083

Static handle specification

Panel component

V-Handle,FRONT PANELS,U PROFILES,Cut-SIze

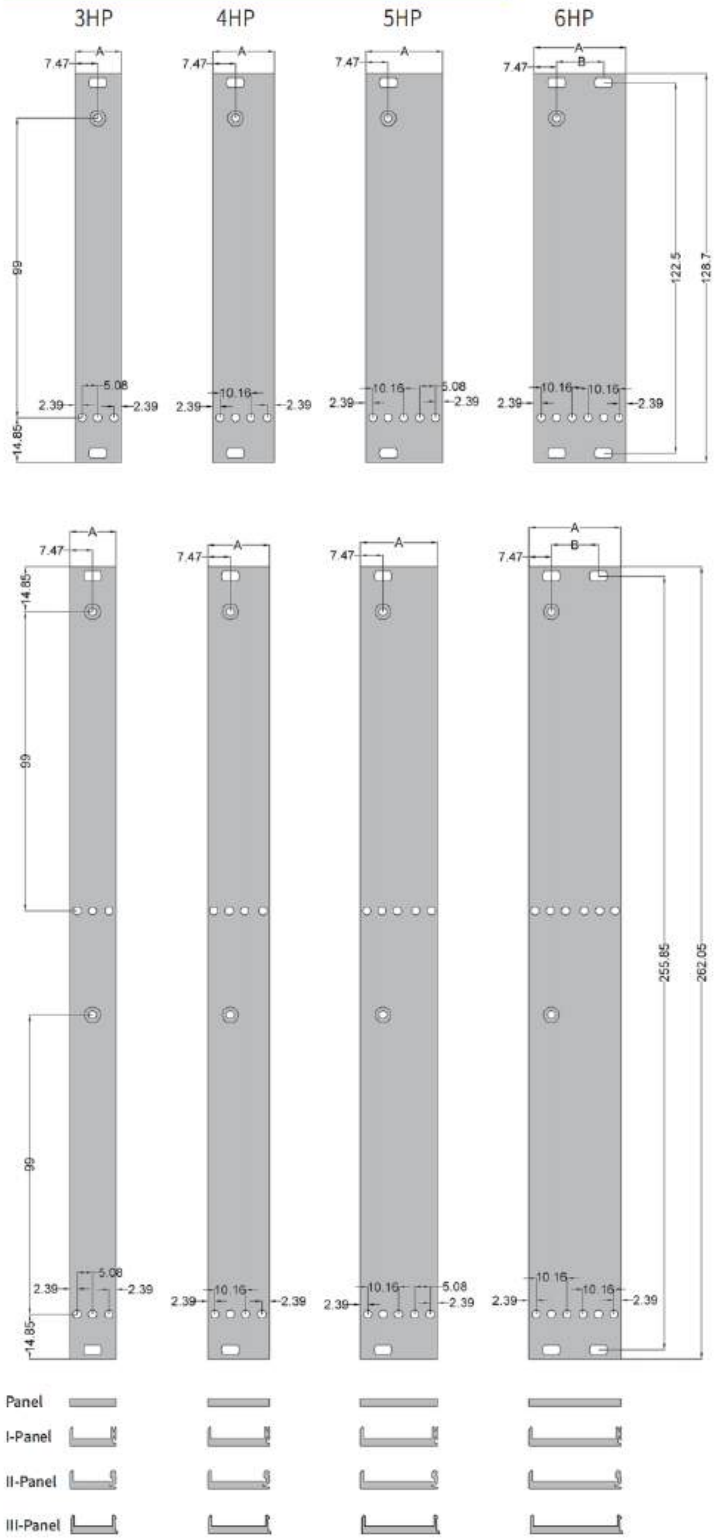

Delivery includes

Item	Name	Qty	Description
5	Panel	1	Front panel (U profile), Al, front anodised, rear conductive

Panel Order information

Width HP	Amm	Bmm	3U Order no	6U Order no
3	14.9	-	00130304	00160304
4	19.98	-	00130404	00160404
5	25.06	-	00130504	00160504
6	30.14	-	00130604	00160604
7	35.22	-	00130704	00160704
8	40.3	25.4	00130804	00160804
10	50.46	35.56	00131004	00161004
12	60.62	45.72	00131204	00161204

I Panel Order information

Width HP	Amm	Bmm	3U Order no	6U Order no
3	14.9	-	00130301	00160301
4	19.98	-	00130401	00160401
5	25.06	-	00130501	00160501
6	30.14	-	00130601	00160601
7	35.22	-	00130701	00160701
8	40.3	25.4	00130801	00160801
10	50.46	35.56	00131001	00161001
12	60.62	45.72	00131201	00161201

II Panel Order information

Width HP	Amm	Bmm	3U Order no	6U Order no
3	14.9	-	00130302	00160302
4	19.98	-	00130402	00160402
5	25.06	-	00130502	00160502
6	30.14	-	00130602	00160602
7	35.22	-	00130702	00160702
8	40.3	25.4	00130802	00160802
10	50.46	35.56	00131002	00161002
12	60.62	45.72	00131202	00161202

III Panel Order information

Width HP	Amm	Bmm	3U Order no	6U Order no
3	14.9	-	00130303	00160303
4	19.98	-	00130403	00160403
5	25.06	-	00130503	00160503
6	30.14	-	00130603	00160603
7	35.22	-	00130703	00160703
8	40.3	25.4	00130803	00160803
10	50.46	35.56	00131003	00161003
12	60.62	45.72	00131203	00161203

Subracks Accessories

Guide rail

Product description

- For 1.6-2.0mm thickness PCB boards
- Codable, coding chamber for mounting coding pegs
- Different color forms are used to identify different slots
- Red for system slots
- Green for power supply
- Grey and yellow for plug-in components
- Only available for EK&EG、EK+&EG+ series subracks

Performance description

- Conformity to standards: EN 45545-2:2013+A1:2015(E)
- Aging standard: GB/T7141-2008,,90°C,6h
- Fire protection standard: EN 45545-2:2013+A1:2015(E)
- Embrittlement standard: GB/T5470-2008, -55°C
- ROHS standard: 2011/65/EU
- Utility model patent for square head guide rail: CN201721517360.4

Material and finish

PC+20%GF
PC+20%GF

CPCI Guide rail

Order information

Board height	Groove width	Color	Colour code	Order no
160	2	Green	RAL6024	1001047
220	2	Grey	RAL7044	1001054

Order information

Board height	Groove width	Color	Colour code	Order no
80	2	Grey	RAL7044	1001071
80	2	Green	RAL6024	1001134
80	2	Black	RAL9011	1001133
80	2	Red	RAL3031	1001006
80	2	Yellow	RAL1003	1001007
160	2	Grey	RAL7044	1001001
160	2	Green	RAL6024	1001002
160	2	Yellow	RAL1003	1001003
160	2	Black	RAL9011	1001004
160	2	Red	RAL3031	1001005
220	2	Grey	RAL7044	1001012
220	2	Green	RAL6024	1001009
220	2	Yellow	RAL1003	1001011
220	2	Black	RAL9011	1001008
220	2	Red	RAL3031	1001010

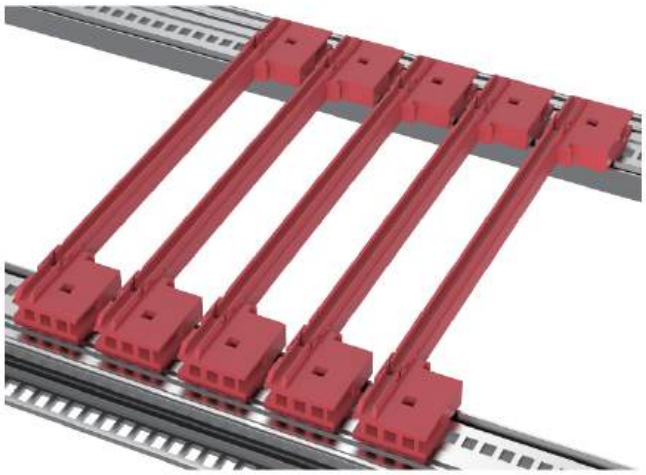

Square guide rail

Order information

Board height	Groove width	Color	Colour code	Order no
160	2	Red	RAL3031	1001051
160	2	Grey	RAL7044	1001014
220	2	Red	RAL3031	1001052
220	2	Grey	RAL7044	1001017

Guide rail

Product description

- For 1.6-2.0mm thickness PCB boards
- Codable, coding chamber for mounting coding pegs
- Different color forms are used to identify different slots
- Red for system slots
- Green for power supply
- Grey and yellow for plug-in components
- Only available for EK&EG、EK+&EG+ series subracks

Performance description

- Conformity to standards: EN 45545-2:2013+A1:2015(E)
- Aging standard: GB/T7141-2008,,90°C,6h
- Fire protection standard: EN 45545-2:2013+A1:2015(E)
- Embrittlement standard: GB/T5470-2008, -55°C
- ROHS standard: 2011/65/EU

Material and finish

PC+20%GF

EK+ Guide rail

Order information

Board height	Groove width	Color	Colour code	Order no
160	2	Grey	RAL7044	1001086
220	2	Grey	RAL7044	1001156

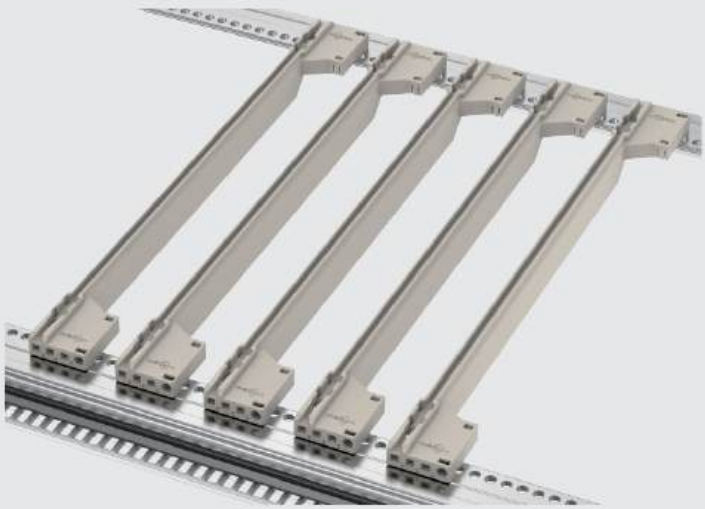

EK+ Guide rail

Subracks Accessories

Guide rail

Product description

- For 1.6-2.0mm thickness PCB boards.
- Codable, coding chamber for mounting coding pegs
- Different color forms are used to identify different slots
- Red for system slots
- Green for power supply
- Grey and yellow for plug-in components
- Only available for EK&EG、EK+&EG+ series subracks

Performance description

- Conformity to standards: EN 45545-2:2013+A1:2015(E)
- Aging standard: GB/T7141-2008,,90°C,6h
- Fire protection standard: EN 45545-2:2013+A1:2015(E)
- Embrittlement standard: GB/T5470-2008, -55°C
- ROHS standard: 2011/65/EU

Material and finish

PC+20%GF
PC+20%GF

Type F guide rail

Order information

Board height	Groove width	Color	Colour code	Order no
160	2	Grey	RAL7032	1001049
220	2	Grey	RAL7032	1001048

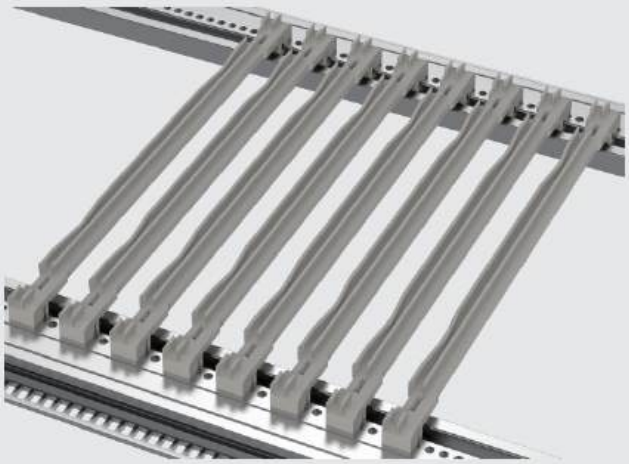

Clip guide rail

Order information

Board height	Groove width	Color	Colour code	Order no
160	2	Grey	RAL7044	1001045
160	2	Yellow	RAL1003	1001046
220	2	Grey	RAL7044	1001044

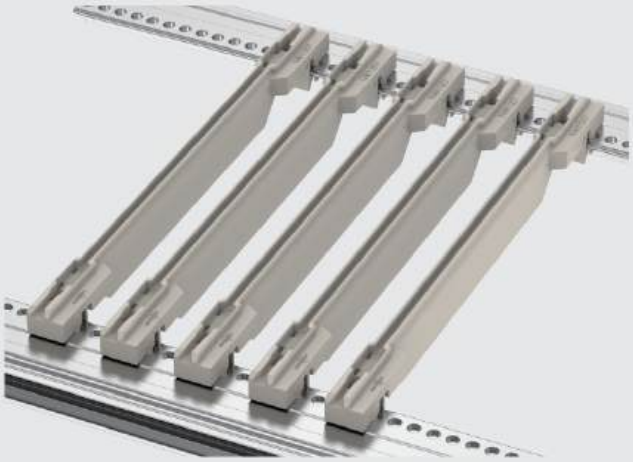

Enhanced card guide rail

Order information

Board height	Groove width	Color	Colour code	Order no
160	2	Grey	RAL7044	1001187
220	2	Grey	RAL7044	1001186

Guide rail

Product description

- For 1.6-2.0mm thickness PCB boards
- Codable, coding chamber for mounting coding pegs
- Different color forms are used to identify different slots
- Red for system slots
- Green for power supply
- Grey and yellow for plug-in components
- Only available for BEK&BEG series subracks

Performance description

- Conformity to standards: EN 45545-2:2013+A1:2015(E)
- Aging standard: GB/T7141-2008,,90℃,6h
- Fire protection standard: EN 45545-2:2013+A1:2015(E)
- Embrittlement standard: GB/T5470-2008, -55℃
- ROHS standard: 2011/65/EU

Material and finish

PC+20%GF
PC+20%GF
PC+20%GF

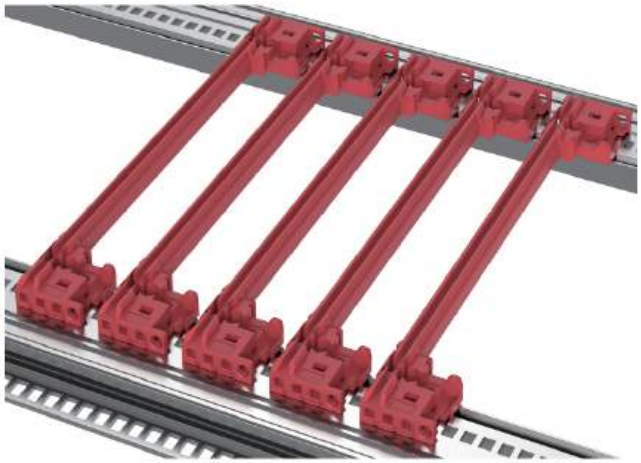

Type B CPCI guide rail

Order information

Board height	Groove width	Color	Colour code	Order no
70	2	Grey	RAL7044	1001125
70	2	Red	RAL3031	1001124
160	2	Grey	RAL7044	1001018
160	2	Red	RAL3031	1001019
220	2	Grey	RAL7044	1001131
220	2	Red	RAL3031	1001113

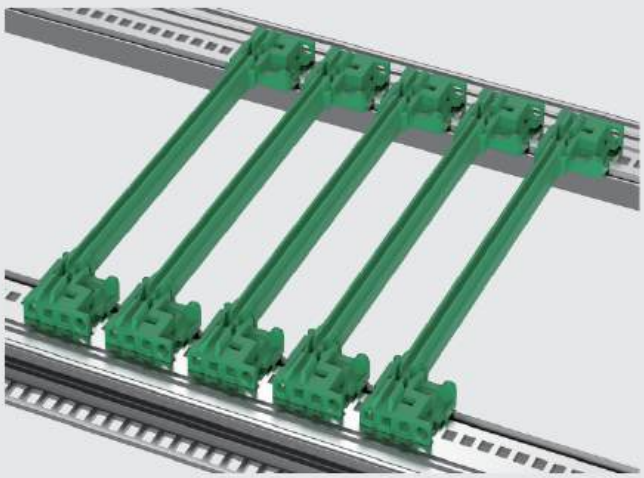

Type B CPCI offset guide rail

Order information

Board height	Groove width	Color	Color code	Order no
160	2	Green	RAL6024	1001096

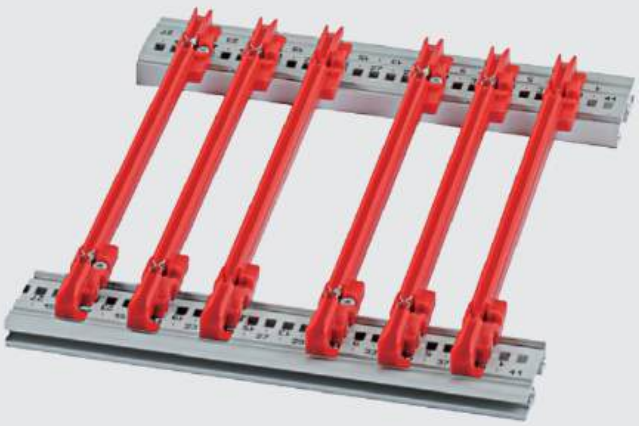

Type B standard guide rail

Order information

Board height	Groove width	Color	Colour code	Order no
70	2	Red	RAL3031	1001102
160	2	Red	RAL3031	1001020
220	2	Red	RAL3031	1001015

Subracks Accessories

Guide rail

Product description

- For 1.6-2.0mm thickness PCB boards
- Codable, coding chamber for mounting coding pegs
- Different color forms are used to identify different slots
- Red for system slots
- Green for power supply
- Grey and yellow for plug-in components
- Only available for BEK&BEG series subracks

Performance description

- Conformity to standards: EN 45545-2:2013+A1:2015(E)
- Aging standard: GB/T7141-2008,,90°C,6h
- Fire protection standard: EN 45545-2:2013+A1:2015(E)
- Embrittlement standard: GB/T5470-2008, -55°C
- ROHS standard: 2011/65/EU

Material and finish

PC+20%GF
PC+20%GF

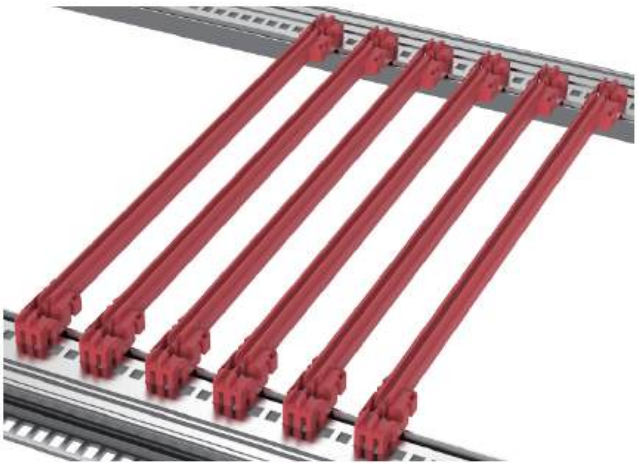

Type B short guide rail

Order information

Board height	Groove width	Color	Colour code	Order no
100	2	Grey	RAL7044	1001116
100	2	Red	RAL3031	1001103
160	2	Grey	RAL7044	1001153
160	2	Green	RAL6018	1001154
160	2	Red	RAL3031	1001147
220	2	Grey	RAL7044	1001119
220	2	Red	RAL3031	1001108

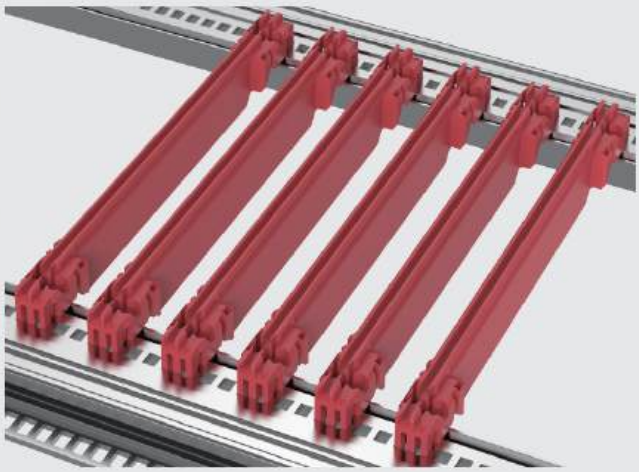

Type B enhanced guide rail

Order information

Board height	Groove width	Color	Colour code	Order no
160	2	Grey	RAL7032	1001121
160	2	Red	RAL3031	1001120
220	2	Grey	RAL7032	1001104
220	2	Red	RAL3031	1001099
280	2	Grey	RAL7032	1001123
280	2	Red	RAL3031	1001122

Guide rail

Delivery includes

Name	Qty	Description
End piece (top)	1	Used for 1.6-2.0mm thickness PCB board, material PC+20%GF
End piece (Bottom)	1	Used for 1.6-2.0mm thickness PCB board, material PC+20%GF
The middle part guide rail	1	Aluminum profile, length can be customized, used for any length of board

Performance description

- Conformity to standards: EN 45545-2:2013+A1:2015(E)
- Aging standard: GB/T7141-2008,,90°C,6h
- Fire protection standard: EN 45545-2:2013+A1:2015(E)
- Embrittlement standard: GB/T5470-2008, -55°C
- ROHS standard: 2011/65/EU
- Only available for BEK&BEG series subracks

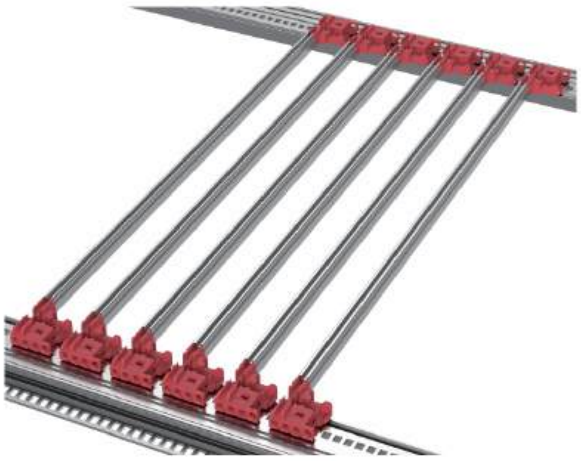

Multi piece type B CPCI guide rail

Order information

Board height	Groove width	Color	Colour code	Order no	Groove width	Order no
160	2.5	Red	RAL3031	1001209	2.0	1001259
220	2.5	Red	RAL3031	1001210	2.0	1001260
280	2.5	Red	RAL3031	1001211	2.0	1001261
340	2.5	Red	RAL3031	1001212	2.0	1001262
160	2.5	Grey	RAL7044	1001213	2.0	1001263
220	2.5	Grey	RAL7044	1001214	2.0	1001264
280	2.5	Grey	RAL7044	1001215	2.0	1001265
340	2.5	Grey	RAL7044	1001216	2.0	1001266

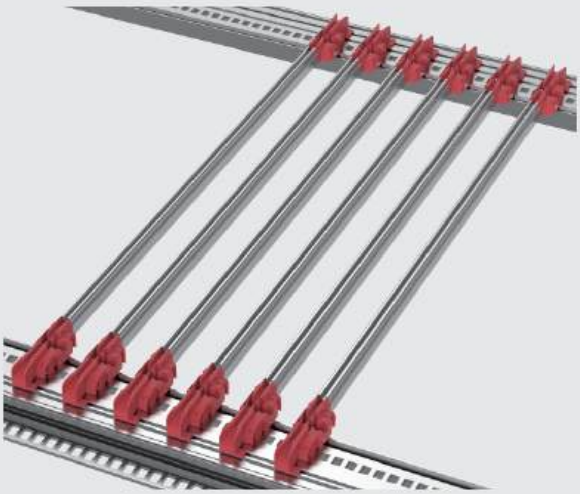

Multi piece type B guide rail

Order information

Board height	Groove width	Color	Colour code	Order no	Color	Colour code	Order no
160	2	Red	RAL3031	1001111	Grey	RAL7044	1001115
220	2	Red	RAL3031	1001112	Grey	RAL7044	1001126
280	2	Red	RAL3031	1001107	Grey	RAL7044	1001127
340	2	Red	RAL3031	1001114	Grey	RAL7044	1001128

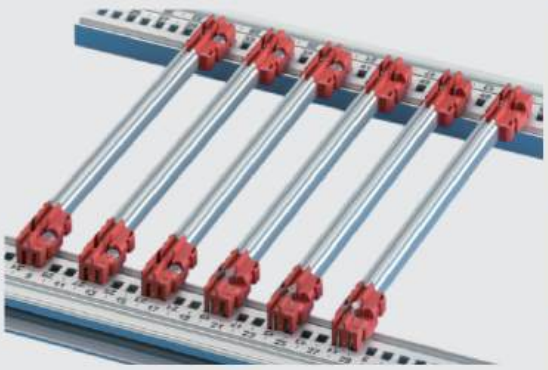

Multi piece type B short guide rail

Order information

Board height	Groove width	Color	Colour code	Order no
160	2	Red	RAL3031	1001025
220	2	Red	RAL3031	1001026
280	2	Red	RAL3031	1001184
340	2	Red	RAL3031	1001027

Subracks Accessories

Guide rail

Delivery includes

Name	Qty	Description
End piece (top)	1	Used for 1.6-2.0mm thickness PCB board, material PC+20%GF
End piece (Bottom)	1	Used for 1.6-2.0mm thickness PCB board, material PC+20%GF
The middle part guide rail	1	Aluminum profile, length can be customized, used for any length of board

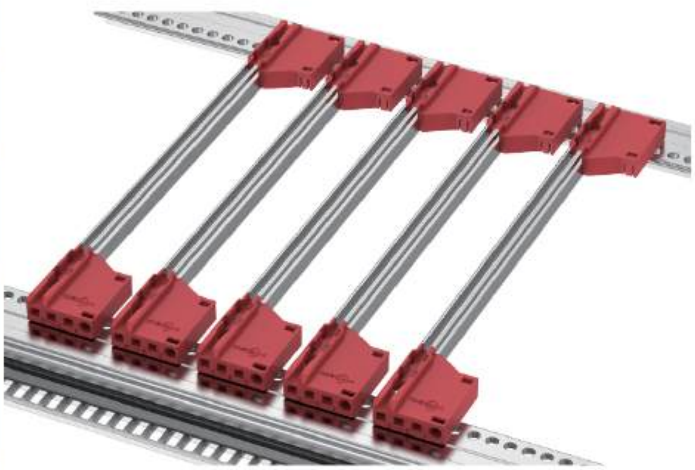

Multi piece type CPCI guide rail

Performance description

- Conformity to standards: EN 45545-2:2013+A1:2015(E)
- Aging standard: GB/T7141-2008,,90°C,6h
- Fire protection standard: EN 45545-2:2013+A1:2015(E)
- Embrittlement standard: GB/T5470-2008, -55°C
- ROHS standard: 2011/65/EU
- Only available for EK&EG、EK+&EG+ series subracks

Order information

Board height	Groove width	Color	Colour code	Order no
160	2	Red	RAL3031	1001233
220	2	Red	RAL3031	1001234
280	2	Red	RAL3031	1001235
340	2	Red	RAL3031	1001236
160	2	Grey	RAL7044	1001237
220	2	Grey	RAL7044	1001238
280	2	Grey	RAL7044	1001239
340	2	Grey	RAL7044	1001240
160	2.5	Red	RAL3031	1001241
220	2.5	Red	RAL3031	1001242
280	2.5	Red	RAL3031	1001243
340	2.5	Red	RAL3031	1001244
160	2.5	Grey	RAL7044	1001245
220	2.5	Grey	RAL7044	1001246
280	2.5	Grey	RAL7044	1001247
340	2.5	Grey	RAL7044	1001248

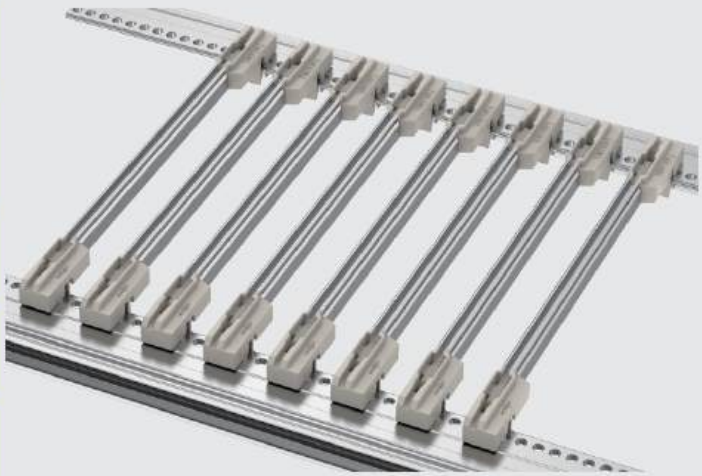

Multi piece type Clip guide rail

Order information

Board height	Groove width	Color	Colour code	Order no
160	2	Red	RAL3031	1001217
220	2	Red	RAL3031	1001218
280	2	Red	RAL3031	1001219
340	2	Red	RAL3031	1001220
160	2	Grey	RAL7044	1001221
220	2	Grey	RAL7044	1001222
280	2	Grey	RAL7044	1001223
340	2	Grey	RAL7044	1001224
160	2.5	Red	RAL3031	1001225
220	2.5	Red	RAL3031	1001226
280	2.5	Red	RAL3031	1001227
340	2.5	Red	RAL3031	1001228
160	2.5	Grey	RAL7044	1001229
220	2.5	Grey	RAL7044	1001230
280	2.5	Grey	RAL7044	1001231
340	2.5	Grey	RAL7044	1001232

Heavy-duty guide rail

Product description

- Used for 1.6-2.0mm thick PCB boards
- Commonly used for installing heavier card modules
- Screw fixation to BEG square hole front beam, BEG front beam or reinforced mold beam, with fastening screws
- Suitable for BEG series chassis

Performance description

- Conformity to standards: EN 45545-2:2013+A1:2015(E)
- Aging standard: GB/T7141-2008,,90°C,6h
- Fire protection standard: EN 45545-2:2013+A1:2015(E)
- Embrittlement standard: GB/T5470-2008, -55°C
- ROHS standard: 2011/65/EU

Material and finish

- Extruded aluminum profile: 6063-T5
- Surface treatment: anodizing

Heavy-duty guide rail

Order information

Board height	Groove width	Color	Order no
160	2	Silvery	1001167
220	2	Silvery	1001168
280	2	Silvery	1001163
340	2	Silvery	1001151
400	2	Silvery	1001155
160	2.5	Silvery	1001171
220	2.5	Silvery	1001135
280	2.5	Silvery	1001136
340	2.5	Silvery	1001137
400	2.5	Silvery	1001138

Subracks Accessories

H Guide rail

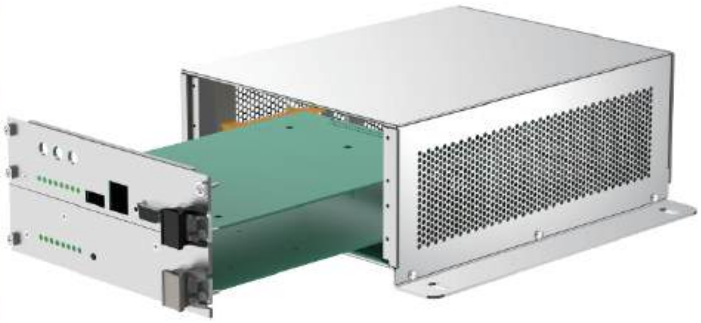

Product description

- Multiple installation modes to satisfy different requirements
- Suitable for various types (standard and non-standard) of boards and various insert boxes
- (standard and non-standard) between a variety of installation and cooperation
- Slot width 2.3, suitable for 1.6-2.0 thickness of PCB boards

Performance description

- Compliant with IE60297
- Conformity to standards: EN 45545-2:2013+A1:2015(E)
- Aging standard: GB/T7141-2008,,90°C,6h
- Fire protection standard: EN 45545-2:2013+A1:2015(E)
- Embrittlement standard: GB/T5470-2008, -55°C
- ROHS standard: 2011/65/EU

Material and finish

- PC+20%GF

Guide rail Schematic

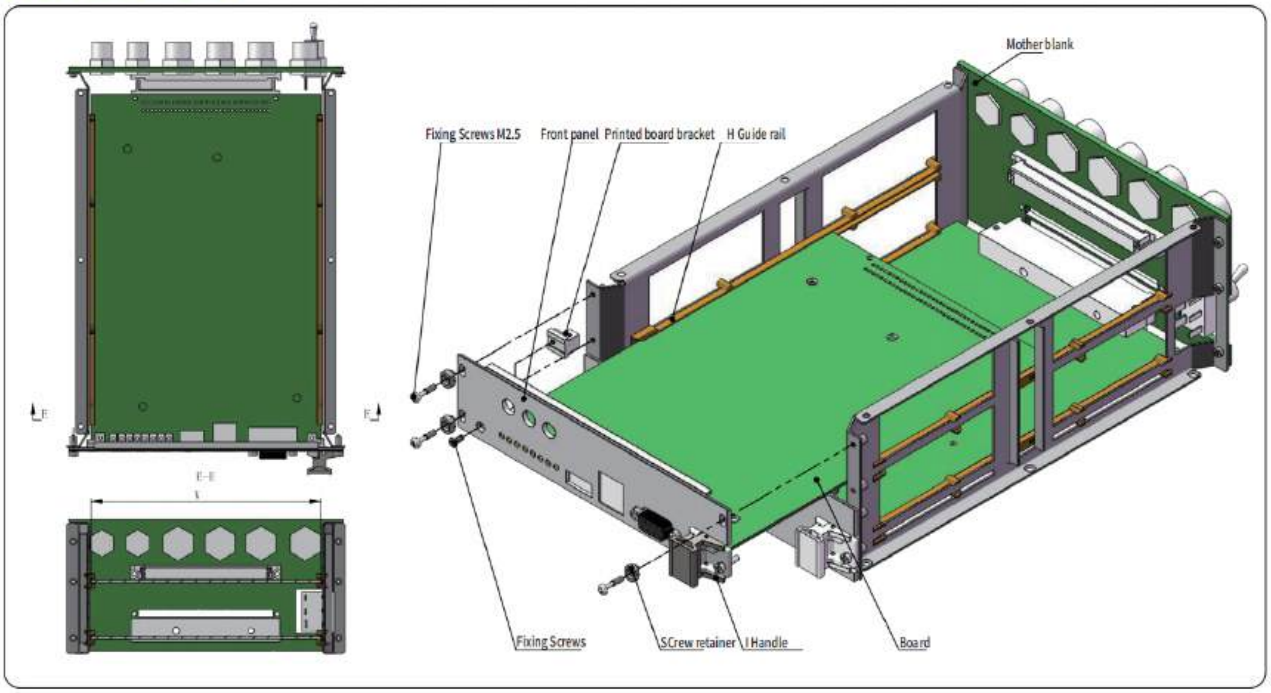

H Guide rail

Dimensions

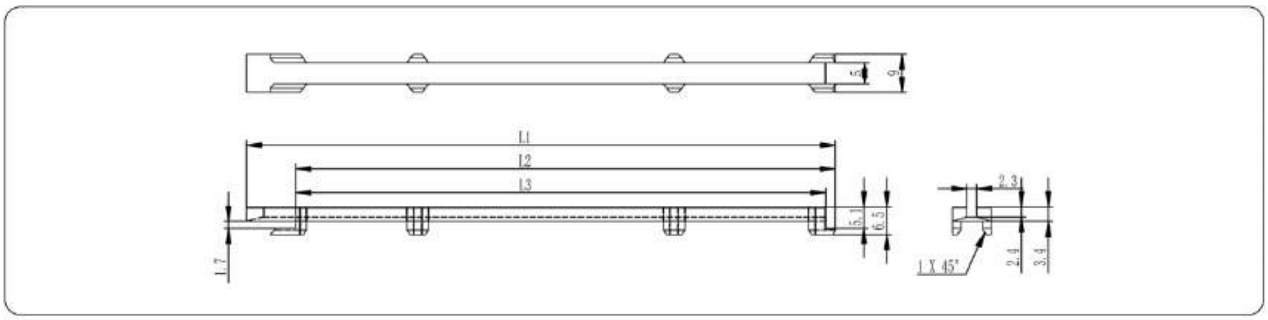

Cut-Size

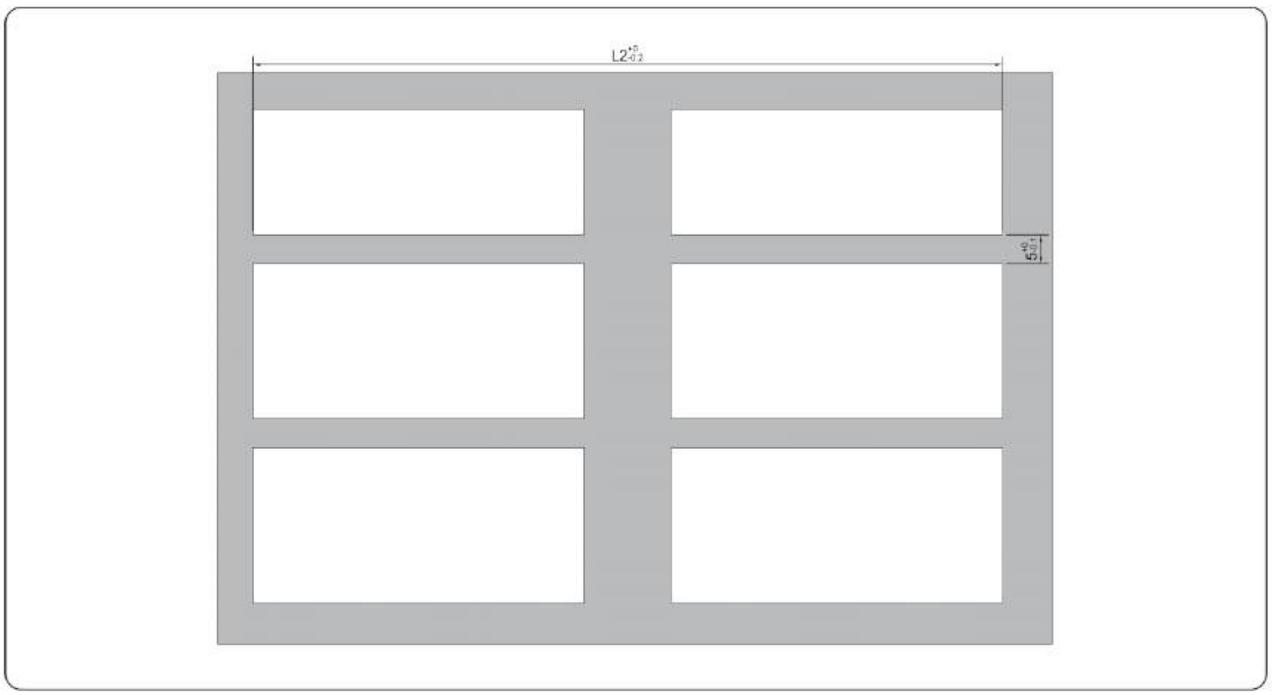

Order information

Only applicable board	L1	L2	L3	Color	Order no
220	197.7	186.2	184	Yellow	1001076
160	137.7	126.2	124	Yellow	1001077
110(Non-standard Board)	85.7	74.2	72	Grey	1001058

Guide rail accessories

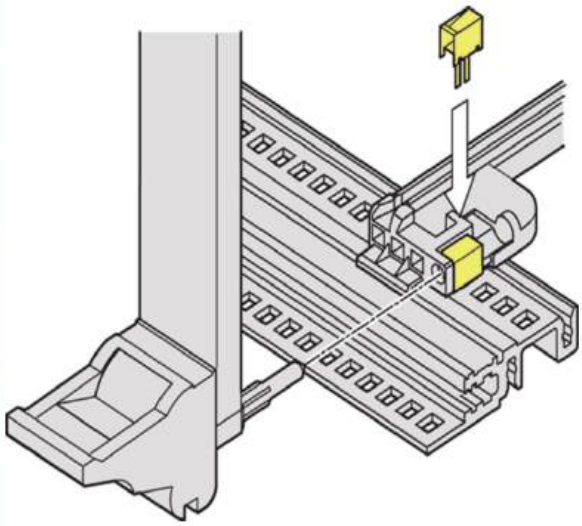

ESD clips, CompactPCI/VME 64

- Spring steel, tin-plated, ESD clip,for alignment pin in accordance with IEEE
- can be plugged into the guide rails withcoding and into the keying/coding block
- provides conductive contact between thealignment pin of the insertion/extractor handle(IEL or IET handle)and the horizontal rail

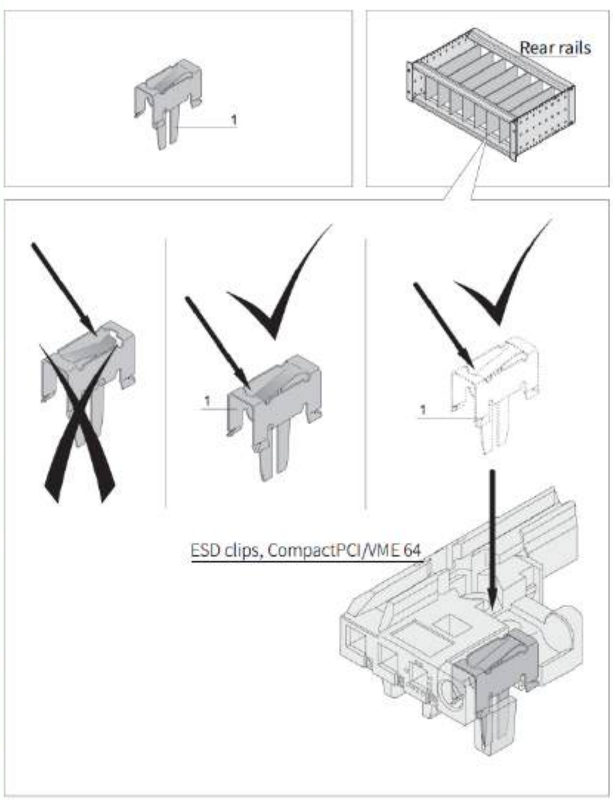

Order information

Item	Name	Order no
1	ESD clips, CompactPCI/VME 64	1010010

Guide rail accessories

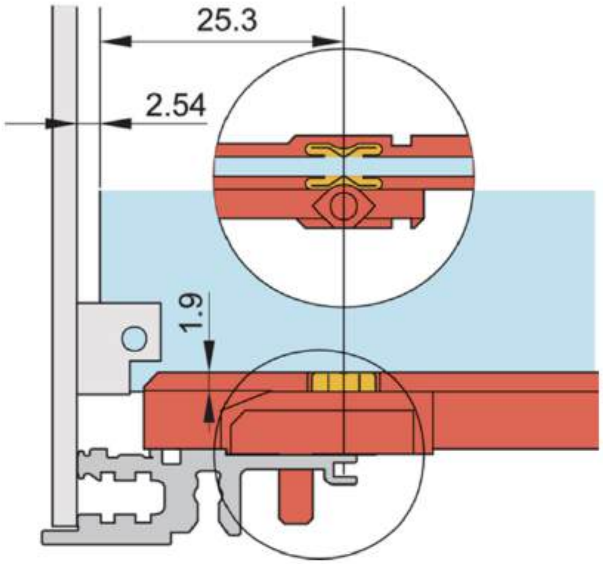

ESD clips for guide rails

- Spring steel, tin-plated,provides conductive contact between board and horizontal rail,on both the solder side and the component side

Order information

Name	Order no
ESD Clip	1010001

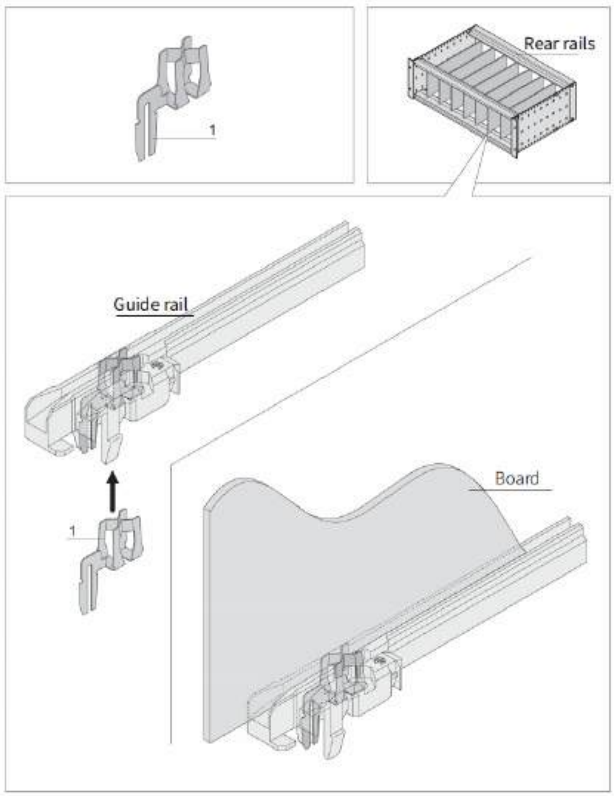

Subracks Accessories

Guide rail accessories

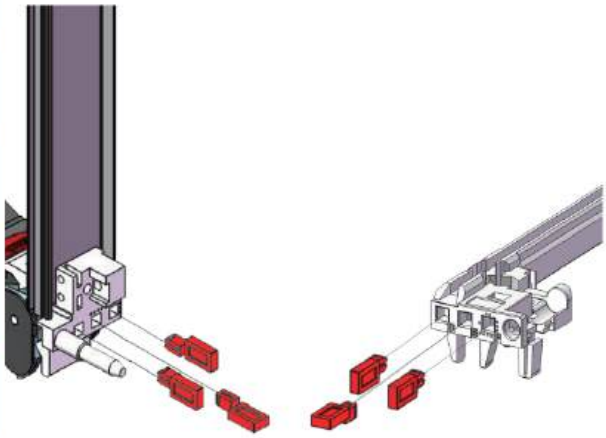

CompactPCI Coding pins

- Keying/coding for CompactPCI, VME64x handles to IEEE 1011.10 and IEC 60297-3-103
- Keying/coding peg, PC, UL 94 V-0, RAL 7035/RAL 3020
  The keying/coding pegs prevent plug-in units to be mounted in wrong slots. They are inserted in the chambers of the codablecard guides as well as in the insertion/extractorhandles IEL or IET (4 possible positions),resulting in 64 codings per card guide;when coding the upper and lower card guide, 4096 codings will result;

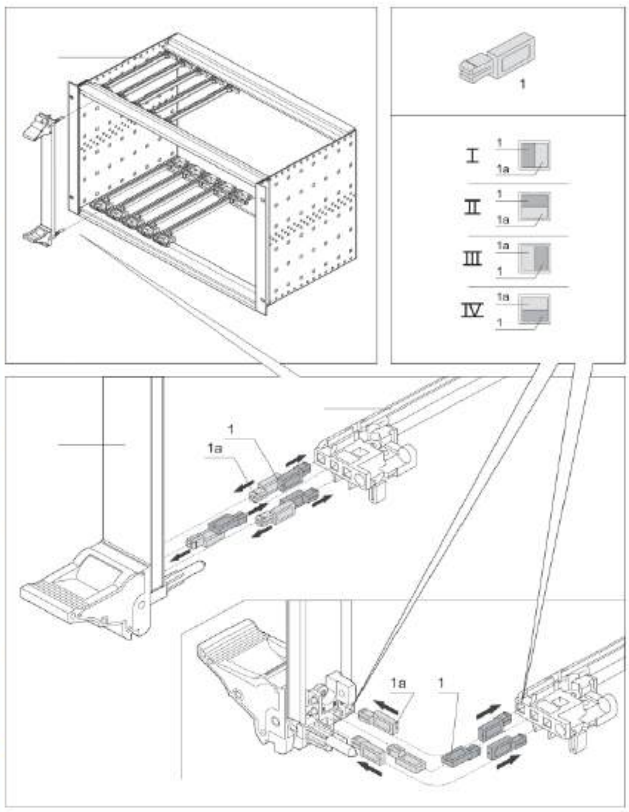

Order information

Name	Color	Colour code	Order no
Coding pins	Red	RAL3020	1009010
Coding pins	Grey	RAL7032	1009011

瑞德科诺
RDEKONO

Standards/certifications

Structural dimensions: IEC 60297-3-101 , IEC 60297-3-102, IEC 60297-3-103
Protection level: IP20, Refer to IEC 60529
EMC testing basis: GB/T 39278-2020
Vibration and impact testing: IEC 61587-1 , DB Standard BN 411002> NFF 61005、EN 50155
Salt spray test: 72 hours (neutral salt spray test: low temperature -40 °, high temperature 35 °, sodium chloride 5%)

Customized service

Customize the side panel of the Subracks
Panel and panel opening, screen printing

19" CUR Series Subrack Introduction

The 19" CUR series of subracks is a series of subracks developed by **RDEKONO** for the application of 19" standard subracks.The 19" CUR series has been proven to be a stable and rugged subracks that meets all the requirements of the 19" standard size and application

19" CUR Series Subracks introduction

The 19" CUR series subrack is an electronic subrack for a wide range of stan dard electronic equipment and user-defined electronic systems for 19"

Characteristics of 19 "CUR series chassis

- **RDEKONO**'s 19" CUR series subracks are manufactured using advanced technology
- The 19" CUR series is compliant with the 19" standard and easy to assemble (Refer to the company's 19" standard summary manual for details). Fully embodies the characteristics and advantages of standardization, modularization and serialization
- All series of products use a combination of common standard parts, reflecting a high degree of flexibility, customers can use common standard parts or customized products according to specific needs vibration, shock test standards: according to IEC 61587-1, NE50155, BN411002, NF F67012, NF F67002 test.
- Subracks with good electromagnetic shielding performance

19"CUR Series Subracks

19"CUR Subrack

- Aluminum profile panel, the main body of the subrack is covered with aluminum zinc plate
- Detachable rear panel for easy installation
- Standard 19" power supply or ATX power supply can be installed
- Can be used to install irregularly shaped boards or power modules
- Standard 19" mounting is available, as well as slide-in mounting

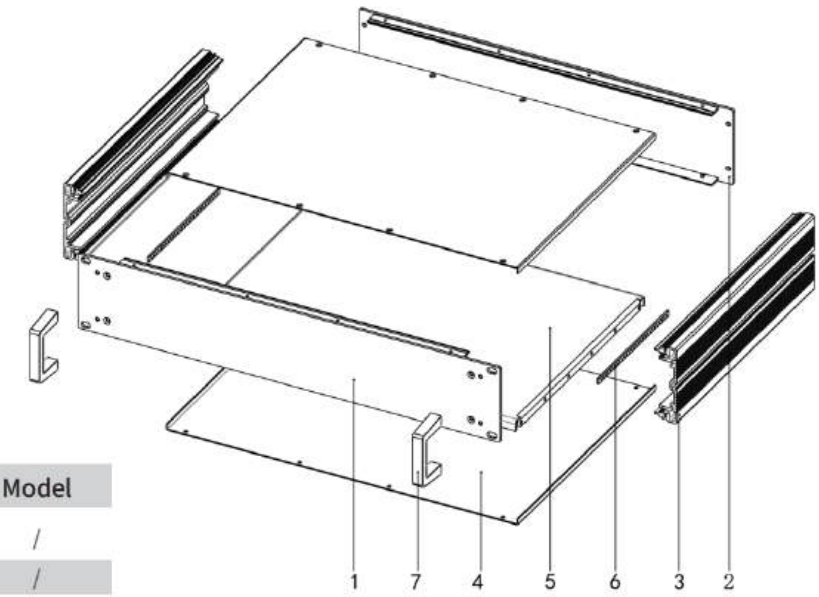

Delivery includes

Item	Name	Qty	Model
1	Front panel	1	/
2	Rear panel	1	/
3	Side panel	2	/
4	Cover plate	2	/
5	Mounting plate	1	Choice
6	Threaded insert	2	/
7	Handle	1	Choice

Order information

Height	Width	Depth	Model	Order no
1U	84TE	220	Perforated	7184-22011
1U	84TE	220	Without holes	7184-22001
1U	84TE	280	Perforated	7184-28011
1U	84TE	280	Without holes	7184-28001
1U	84TE	340	Perforated	7184-34011
1U	84TE	340	Without holes	7184-34001
2U	84TE	220	Perforated	7284-22011
2U	84TE	220	Without holes	7284-22001
2U	84TE	280	Perforated	7284-28011
2U	84TE	280	Without holes	7284-28001
2U	84TE	340	Perforated	7284-34011
2U	84TE	340	Without holes	7284-34001

Height	Width	Depth	Model	Order no
3U	84TE	280	Perforated	7384-28011
3U	84TE	280	Without holes	7384-28001
3U	84TE	340	Perforated	7384-34011
3U	84TE	340	Without holes	7384-34001
3U	84TE	400	Perforated	7384-40011
3U	84TE	400	Without holes	7384-40001
3U	84TE	460	Perforated	7384-46011
3U	84TE	460	Without holes	7384-46001
4U	84TE	280	Perforated	7484-28011
4U	84TE	280	Without holes	7484-28001
4U	84TE	340	Perforated	7484-34011
4U	84TE	340	Without holes	7484-34001
4U	84TE	400	Perforated	7484-40011
4U	84TE	400	Without holes	7484-40001
4U	84TE	460	Perforated	7484-46011
4U	84TE	460	Without holes	7484-46001
5U	84TE	460	Perforated	7584-46011
5U	84TE	460	Without holes	7584-46001

19"CUR Series Subracks

瑞德科诺 RDEKON

19"EMC Shielded Subracks

- Aluminum profile panel, the main body of the subrack is covered with aluminum zinc plate
- Detachable rear panel for easy installation
- Standard 19" power supply or ATX power supply can be installed
- Can be used to install irregularly shaped boards or power modules
- Standard 19" mounting is available, as well as slide-in mounting
- Shielded chassis with EMC kit

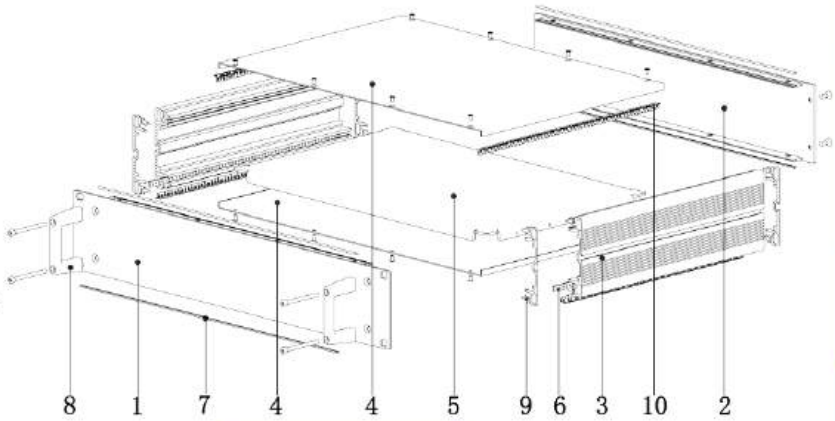

Order information

Height	Width	Depth	Model	Order no
1U	19"	220	Perforated	7184-2200
1U	19"	220	Without holes	7184-2201
1U	19"	280	Perforated	7184-2800
1U	19"	280	Without holes	7184-2801
1U	19"	340	Perforated	7184-3400
1U	19"	340	Without holes	7184-3401
2U	19"	220	Perforated	7284-2200
2U	19"	220	Without holes	7284-2201
2U	19"	280	Perforated	7284-2800
2U	19"	280	Without holes	7284-2801
2U	19"	340	Perforated	7284-3400
2U	19"	340	Without holes	7284-3401

Delivery includes

Item	Name	Qty	Model	Describe
1	Front panel	1	/	Made of aluminum 6063 profile, anodized, with high strength and corrosion resistance, as well as good protective performance
2	Rear panel	1	/	Made of aluminum 6063 profile, anodized, with high strength and corrosion resistance, as well as good protective performance
3	Side panel	2	/	The left and right side panels are made of aluminum 6063 profiles, and EMC kits are installed at the contact parts with the front and rear panels to improve electromagnetic shielding effect
4	Cover plate	2	/	5052 aluminum plate, with a cover plate shielding spring installed at the contact part with the side plate to meet electromagnetic shielding requirements
5	Mounting plate	1	Optional	Made of aluminum, anodized, and the mounting plate is an optional accessory that needs to be ordered separately
6	Threaded insert	2	/	When selecting a mounting plate for fixing, it is necessary to choose
7	EMC components	4	/	EMC kits can be installed on the top and bottom of the front and rear panels to meet electromagnetic shielding requirements
8	Handle	2	Optional	Made of aluminum, sandblasted and oxidized, the handle is an optional accessory and needs to be ordered separately
9	EMC components	4	/	Used for conductive contact between side panels and front and rear panels, meeting electromagnetic shielding requirements
10	Cover plate shielding spring	4	/	Used for conductive contact between the cover plate and the side plate, meeting electromagnetic shielding requirements

19"CUR Series Subracks

19"EMC Shielded Subracks

- The chassis is designed in a series, including 1U, 2U, 3U, 4U, and 5U
- High structural strength, the side panels and front and rear panels are made of 6063 profiles, making the structure more sturdy
- Solution for Lightweight EMC Electromagnetic Compatibility Chassis

Order information

Height	Width	Depth	Model	Order no
3U	19"	280	Perforated	7384-2800
3U	19"	280	Without holes	7384-2801
3U	19"	340	Perforated	7384-3400
3U	19"	340	Without holes	7384-3401
3U	19"	400	Perforated	7384-4000
3U	19"	400	Without holes	7384-4001
3U	19"	460	Perforated	7384-4600
3U	19"	460	Without holes	7384-4601
4U	19"	280	Perforated	7484-2800
4U	19"	280	Without holes	7484-2801
4U	19"	340	Perforated	7484-3400
4U	19"	340	Without holes	7484-3401
4U	19"	400	Perforated	7484-4000
4U	19"	400	Without holes	7484-4001
4U	19"	460	Perforated	7484-4600
4U	19"	460	Without holes	7484-4601
5U	19"	460	Perforated	7584-4600
5U	19"	460	Without holes	7584-4601

- The front and rear panels of the chassis can be customized with silk screen openings
- The front and rear panels are made of aluminum 6063 profiles, anodized, with high strength and corrosion resistance, as well as good protection performance. When used in conjunction with the EMC kit, it can improve the electromagnetic shielding effect
- The left and right side panels are made of aluminum 6063 profiles, and EMC kits are installed at the contact parts with the front and rear panels to improve electromagnetic shielding effect

Installation diagram of side panel and front panel

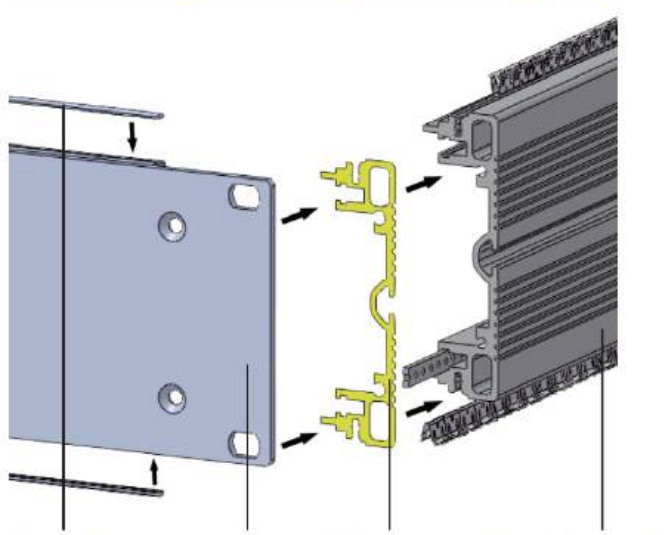

瑞德科诺 RDEKON

19 "CUR Subrack shielding test report

- 19"EMC subrack has remarkable shielding effect
- The shielding effect can reach the national military standard C level
- The test results are as shown in the figure

Shielded accessories

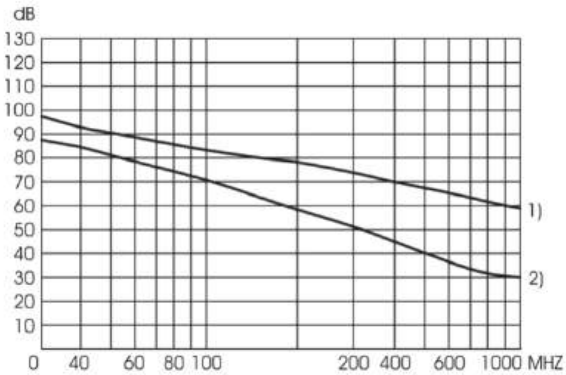

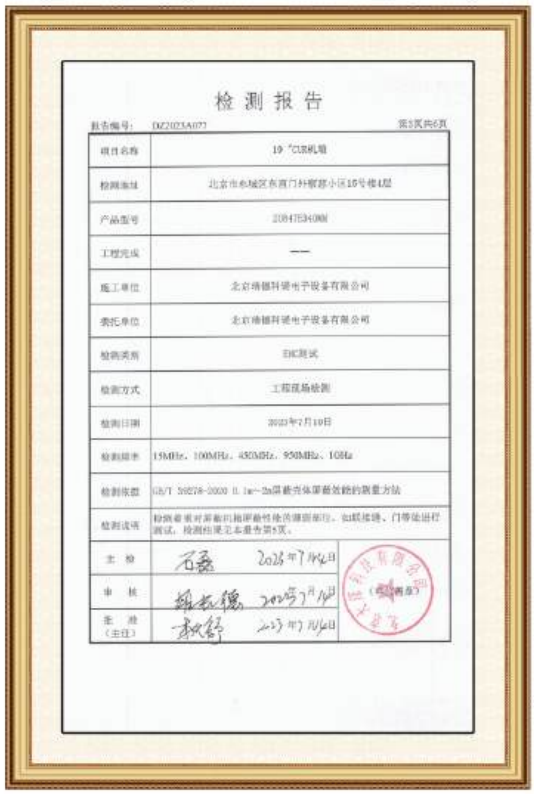

检 测 报 告

报告编号：DZ2023A077　　第1页共6页

项目名称	19 "CUR机箱
检测地址	北京市东城区东直门外雍郡小区16号楼4层
产品型号	2U847E340M
工程完成	——
施工单位	北京瑞德科诺电子设备有限公司
委托单位	北京瑞德科诺电子设备有限公司
检测类别	EMC测试
检测方式	工程现场检测
检测日期	2023年7月19日
检测频率	15MHz、100MHz、450MHz、950MHz、1GHz
检测依据	GB/T 30278-2020 II.1a—2a屏蔽壳体屏蔽效能的测量方法
检测说明	检测要求对屏蔽机箱屏蔽性能各薄弱部位，如缝隙缝、门等进行测试，检测结果见本报告第5页。
主 检	石磊 2023年7月16日
审 核	杨光耀 2023年7月16日
批 准（主任）	赵舒 2023年7月16日

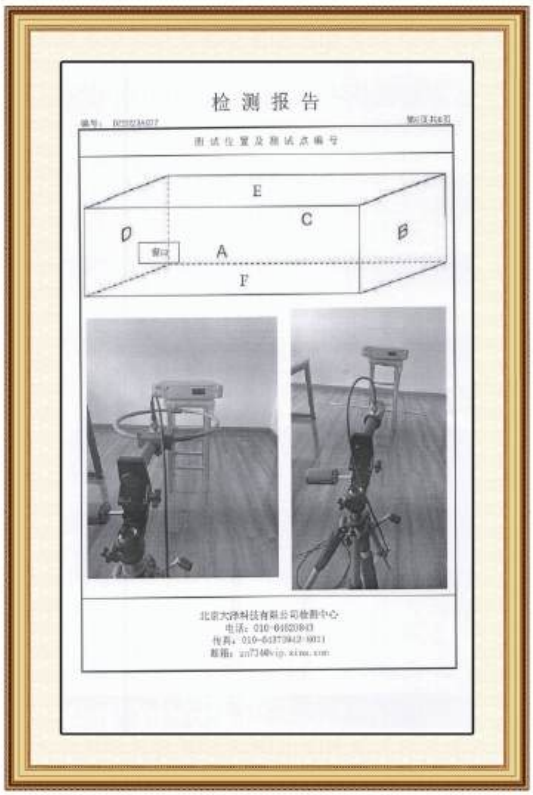

检 测 报 告

编号：DZ2023A077　　第2页共6页

测试位置及测试点编号

北京大津科技有限公司检测中心
电话：010-64820840
传真：010-64373942-8011
邮箱：zn7140@vip.sina.com

检 测 报 告

编号：DZ2023A077　　第3页共6页

试验项目：屏蔽效能
试验条件：26℃ 20%RH

检测项目	测试频率	测试部位	测试点编号	检测结果 无屏蔽的空间信号（单位：dBμV）	屏蔽室内信号（单位：dBμV）	屏蔽效能（单位：dB）
屏蔽效能	15MHz	A（正面）	1	66	5	61
		B（右侧）	2	66	3	63
		C（后面）	3	66	2	64
		D（左侧）	4	68	1	67
		E（上面）	5	68	0	68
		F（下面）	6	68	0	68
	100MHz	A（正面）	1	65	22	43
		B（右侧）	2	66	21	44
		C（后面）	3	65	17	48
		D（左侧）	4	66	16	49
		E（上面）	5	66	30	36
		F（下面）	6	65	28	37
	450MHz	A（正面）	1	80	25	55
		B（右侧）	2	80	34	46
		C（后面）	3	80	26	54
		D（左侧）	4	80	25	55
		E（上面）	5	80	30	50
		F（下面）	6	80	26	54
	1GHz	A（正面）	1	75	32	43
		B（右侧）	2	75	38	37
		C（后面）	3	75	33	42
		D（左侧）	4	75	37	38
		E（上面）	5	75	40	35
		F（下面）	6	75	39	36

注：屏蔽效能＝无屏蔽的空间信号－屏蔽室内信号

19 "CUR Subrack salt spray test report

- Salt spray test: 72h
- The experimental results are shown in the figure

MCDL-3000-02

中国认可 检测 TESTING CNAS L3331

检 测 报 告

报告编号：MCDL-2024-1301-F

产品名称： 30-84TE-280通风机箱

委托单位： 北京瑞德科诺电子设备有限公司

检测性质： 委托检测

发布日期： 2024年12月04日

机械工业仪器仪表综合技术经济研究所
测量控制设备及系统实验室、
机械工业测量控制设备及网络质量检测中心

机械工业仪器仪表综合技术经济研究所测量控制设备及系统实验室
机械工业测量控制设备及网络质量检测中心

检 测 报 告

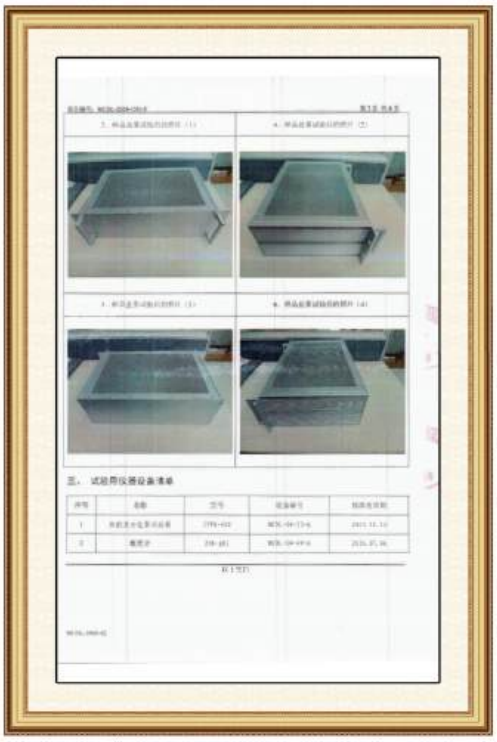

19"CUR Series Subracks

瑞德科诺 RDEKON

Application of 19 "CUR chassis

Delivery includes

Name	Qty	Description
M6 Card Mother	1	Installed on the cabinet column and fixed with screws
M6*16 pan head screw	2	Used for fixing the chassis on the cabinet
Black plastic pad	4	Used in conjunction with screws, fixed to the cabinet through the waist circular hole on the front panel of the chassis

- 19 "CUR series chassis is installed on the cabinet in combination with cabinet nails
- The 19 "CUR series chassis can also be used with sliding rails and installed on the cabinet for easy removal of the chassis
- The CUR series chassis is installed inside the cabinet with cabinet combination nails, as shown in the figure on the right

Application of 19 "CUR chassis

Case background

With the vigorous development of marine technology, the performance requirements for electronic equipment in offshore operations have become increasingly strict, especially in terms of electromagnetic shielding and corrosion resistance. The CUR chassis, as a high-performance electromagnetic shielding chassis, combines the versatility and stability of a 19 inch standard chassis to successfully meet the needs of electronic devices in complex marine environments.

Successful case: Upgrading project of offshore monitoring station

Project background

A certain offshore monitoring station is responsible for important marine environmental monitoring tasks, requiring 24-hour uninterrupted collection and analysis of data. The original chassis had deficiencies in electromagnetic shielding and corrosion resistance, resulting in frequent equipment failures in harsh marine environments, seriously affecting the execution of monitoring tasks. Therefore, the monitoring station has decided to upgrade the chassis to improve the stability and reliability of the equipment.

Solution

In response to the needs of offshore monitoring stations, we recommend the CUR chassis solution and emphasize its excellent performance in electromagnetic shielding and corrosion resistance.

Lmplementation effect

After actual deployment and testing, the CUR chassis has performed well in offshore monitoring stations and successfully solved the problems that existed in the original chassis.

1. Significant electromagnetic shielding effect: The electromagnetic shielding performance of CUR chassis meets the C-level requirements of the national military standard, effectively avoiding the influence of external electromagnetic interference on monitoring data and improving the accuracy and reliability of data.
2. Excellent corrosion resistance: After 72 hours of salt spray testing, there was no corrosion on the surface of the CUR chassis, proving its excellent corrosion resistance and ensuring that the chassis can maintain good appearance and performance even after prolonged exposure to harsh marine environments.
3. Stable and reliable structure: With its sturdy structure and excellent performance, it can withstand harsh weather conditions and strong vibrations at sea, ensuring the long-term stable operation of the equipment.
4. Easy to manage and maintain: Its modular design makes device installation, debugging, and maintenance simpler and more efficient, reducing operation and maintenance costs.

Conclusion

The successful application of CUR chassis in the upgrade project of offshore monitoring stations fully demonstrates its outstanding performance in electromagnetic shielding, corrosion resistance, structural stability, and ease of management. This chassis not only meets the needs of electronic devices in complex marine environments, but also provides long-term stable operation support for monitoring stations. In the future, with the continuous development of ocean technology, CUR chassis will be widely used in more marine fields, contributing more to the progress of ocean technology.

Application of 19 "CUR chassis

Case background

With the digital transformation of the energy industry, a large power company has decided to carry out intelligent transformation of its key factories to improve energy monitoring and operation efficiency.

Application cases in the power industry

Solution and distinctive advantages

In order to meet the high requirements of the enterprise for the power operation and maintenance management system, our company particularly recommends the CUR series chassis. The CUR chassis not only has modular and standardized design features, but also performs well in electromagnetic shielding and salt spray testing, becoming the highlight of this project.

Electromagnetic shielding meets the national military standard C-level

The electromagnetic shielding performance of CUR chassis has reached the national military standard C-level standard, which means it can effectively prevent external electromagnetic interference from affecting the electronic devices inside the chassis, while reducing the interference of electromagnetic radiation generated by internal devices on the external environment. This characteristic is particularly important in power operation and maintenance systems, as the electromagnetic environment in power systems is complex and variable, requiring extremely high electromagnetic compatibility of equipment. Its electromagnetic shielding performance ensures the stable operation and data accuracy of power monitoring equipment.

Salt spray test for 72 hours

The CUR chassis has passed a 72 hour salt spray test, proving its excellent corrosion resistance performance. Salt spray corrosion is one of the severe challenges faced by electronic devices in coastal areas or high humidity environments. Its corrosion resistance ensures long-term stable operation of the equipment in harsh environments, extending its service life.

Quick delivery

In addition to the aforementioned technical features, it also has the advantage of fast delivery. Our company has a complete production process and supply chain system, which can quickly respond to customer needs and achieve rapid production and delivery of chassis. This feature is particularly important for time sensitive power operation and maintenance system renovation projects, ensuring that the project is completed on time and put into operation.

System implementation and effectiveness

During the project implementation process, our company strictly followed the design plan for production and delivery. The standardized installation and fast delivery characteristics of CUR chassis enable the rapid deployment and operation of power operation and maintenance systems.

After the system goes online, power operation and maintenance personnel can monitor the operation status of the power system in real time through the power monitoring equipment installed in the CUR chassis, and promptly detect and handle potential faults. At the same time, the electromagnetic shielding and corrosion resistance of CUR chassis ensure the stable operation and data accuracy of power monitoring equipment, improving the reliability and stability of power operation and maintenance systems.

Summary

The successful application of CUR chassis in power operation and maintenance systems fully demonstrates its advantages of lightweight, standardization, modularity, electromagnetic shielding, corrosion resistance, and fast delivery. These characteristics not only meet the needs of enterprises for efficient, stable, and reliable power operation and maintenance systems, but also provide useful references and inspirations for the implementation of other similar projects. In the future, our company will continue to be committed to the research and innovation of chassis products, providing high-quality solutions and services to more customers.

19"CUR Series Subracks

Application of 19 "CUR chassis

Case background

CUR chassis, with its standardized, aesthetically pleasing, serialized, modular design, and compliance with electromagnetic compatibility standards, has become an ideal choice for high-end home theaters and multifunctional entertainment and audiovisual spaces.

The following are successful cases of CUR chassis in entertainment and audio:

Customized high-end home theater

In a high-end villa project located in a certain area, the owner hopes to create a 7.1.4 Dolby panoramic immersive cinema. A certain technology limited company (a certain audio and video master) has chosen CUR chassis to install key audio and video equipment, such as audio processors, power amplifiers, etc. The serialization and modular design of CUR chassis make the device layout more compact, while ensuring system stability and electromagnetic compatibility.

The modular feature of CUR chassis also reduces the difficulty of installation and maintenance, and improves work efficiency. In addition, its unified VI design not only enhances the recognition of equipment, but also complements the overall decoration style of the villa.

Multi functional comprehensive entertainment and audiovisual space

1.In a comprehensive entertainment and audiovisual space, the designer used a CUR chassis to install key components such as video processing equipment and audio decoders. This audio-visual space can both watch movies and sing karaoke, with a unique and atmospheric overall design, and strong acoustic design skills. The electromagnetic shielding performance of CUR chassis ensures the stable operation of audio and video equipment, avoiding the impact of electromagnetic interference on sound quality and image quality.

2.The customized service of CUR chassis also meets the special requirements of designers for the appearance and size of the chassis, making the overall design style of the chassis and the audio and video space complement each other.

Summary

The successful case of CUR chassis in entertainment and audio fully demonstrates its advantages in customized solutions, electromagnetic compatibility, heat dissipation performance, and perfect exterior design. These features not only meet the high requirements for equipment quality and performance in high-end home theaters, KTVs, and multifunctional entertain ment spaces, but also provide users with a more comfortable and convenient entertainment experience. In the future, with the continuous development of entertainment and audio technology, the application of CUR chassis in the entertainment and audio field will be more extensive and in-depth.

Application of 19 "CUR chassis

Case background

With the rapid development of the rail transit industry and the deepening of localization transformation, various major railway sections have started to carry out localization transformation of existing trains, aiming to improve the safety and efficiency of train operation. This transformation is not only related to technological upgrading, but also involves multiple aspects such as equipment localization and system optimization, which is of great significance for promoting the sustainable development of the rail transit industry.

Application Cases in the Rail Transit Industry

Solution and distinctive advantages

In response to the high standard requirements of the train operation management system, our company has carefully recommended the CUR series chassis as the core component for this renovation. The CUR chassis, with its modular and standardized design concept, as well as outstanding performance in electromagnetic shielding and corrosion resistance, has become the highlight of the project.

Electromagnetic shielding meets the national military standard C-level

The electromagnetic shielding performance of CUR chassis has reached the national military standard C-level standard, which is particularly important in complex train electromagnetic environments. It can effectively isolate external electromagnetic interference, ensure the stable operation of electronic devices inside the chassis, and reduce the interference of electromagnetic radiation generated by internal devices on the external environment. This performance improvement provides strong support for the accurate operation of train monitoring equipment.

Salt spray test for 72 hours

Through a 72 hour salt spray test, the CUR chassis demonstrated its excellent corrosion resistance performance. The threat of salt spray corrosion to electronic devices cannot be ignored in coastal areas or high humidity environments. The corrosion resistance of CUR chassis ensures the long-term stable operation of equipment in harsh environments, effectively extending the service life of the equipment.

Rapid delivery

Through a 72 hour salt spray test, the CUR chassis demonstrated its excellent corrosion resistance performance. The threat of salt spray corrosion to electronic devices cannot be ignored in coastal areas or high humidity environments. The corrosion resistance of CUR chassis ensures the long-term stable operation of equipment in harsh environments, effectively extending the service life of the equipment.

System implementation and effectiveness

During the project implementation process, our company strictly followed the design plan for production and delivery, ensuring standardized installation and rapid deployment of CUR chassis. After the system goes online, train operators can monitor the operation status of the train system in real time through the power monitoring equipment installed in the CUR chassis, detect and handle potential faults in a timely manner, and effectively improve the reliability and stability of the train operation and maintenance system.

At the same time, the electromagnetic shielding and corrosion resistance of CUR chassis ensure the stable operation and data accuracy of train monitoring equipment in complex environments, providing strong support for the safety and efficiency of train operation.

19"CUR chassis

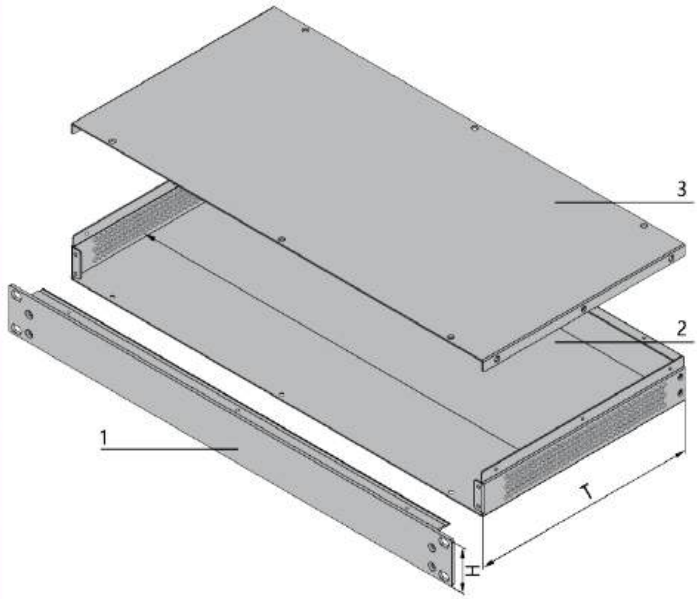

19"CUR chassis Unshielded Protection

- The difference between the 19 "CUR machine box and the 19" CUR chassis is that the front panel is made of aluminum profile, and the chassis is covered with aluminum zinc plate/SECC (color can be customized)
- The front panel of the machine box can be separated, making installation easy
- Can install standard 19 "power supply or ATX power supply
- 1U, 2U, 3U, 4U, suitable for installing irregular circuit boards or power modules

Delivery includes

Item	Name	Qty	Model
1	Front panel	1	/
2	Base body	1	/
3	Rear panel	1	/
4	Cover plate	1	/
5	Assembly kit	1	/

Order information

Height	Width	Depth	Model	Order no
1U	84TE	220	Perforated	9184-22011
1U	84TE	220	Without holes	9184-22001
1U	84TE	280	Perforated	9184-28011
1U	84TE	280	Without holes	9184-28001
1U	84TE	340	Perforated	9184-34011
1U	84TE	340	Without holes	9184-34001
2U	84TE	280	Perforated	9284-28011
2U	84TE	280	Without holes	9284-28001
2U	84TE	340	Perforated	9284-34011
2U	84TE	340	Without holes	9284-34001
3U	84TE	280	Perforated	9384-28011
3U	84TE	280	Without holes	9384-28001
3U	84TE	340	Perforated	9384-34011
3U	84TE	340	Without holes	9384-34001
4U	84TE	280	Perforated	9484-28011
4U	84TE	280	Without holes	9484-28001
4U	84TE	340	Perforated	9484-34011
4U	84TE	340	Without holes	9484-34001

19"CUR Series Subracks

19"CUR Subrack accessory

- The slide rail is divided into three sections, which can extend up to two sections
- Two sliding rails in one set, with a load-bearing capacity of 35kg and a cycle count of 50000 times to be specified by the applicant
- Compliant with GB/T 10125-2021 and QB/T 3832-1999 standards

Order information

Extract size	Slide size	Colour	Order no	Colour	Order no
250mm	10寸	Silvery	1043008	Black	1043013
300mm	12寸	Silvery	1043009	Black	1043014
350mm	14寸	Silvery	1043010	Black	1043015
400mm	16寸	Silvery	1043011	Black	1043016
450mm	18寸	Silvery	1043012	Black	1043017

Telescopic slide rail installation diagram

Telescopic slide rail component

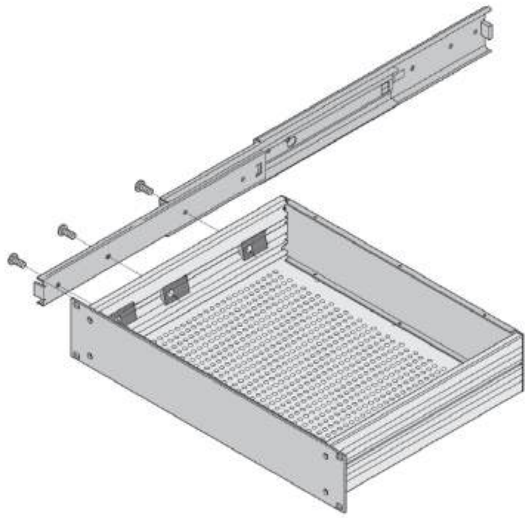

Lnstall the internal fixed rail on the chassis

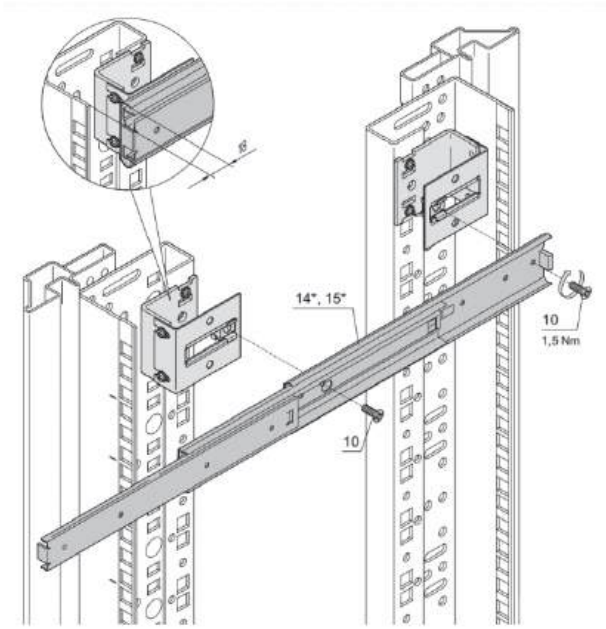

Lnstall the external fixed rail horizontally on the cabinet column

Lnstallation completion diagram of chassis with sliding rail

19"CUR Subrack accessory

Profile front panel blind plate

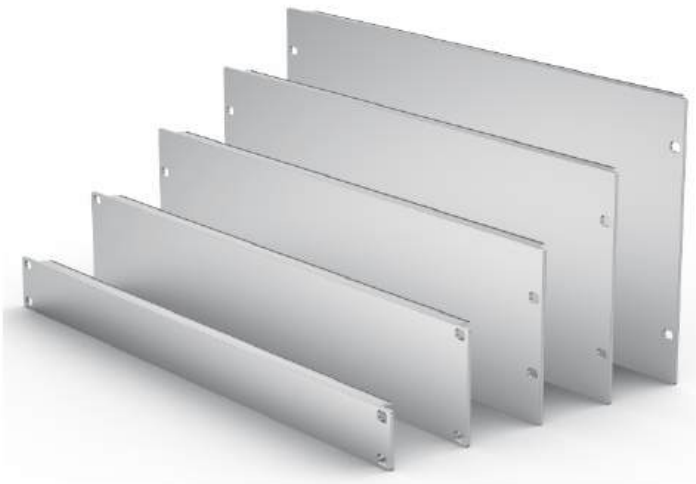

- Aluminum profile EMC blind plate, front anodized
- Used in conjunction with conductive foam to make the contact surface between the blind plate conductive, thereby increasing the shielding effect
- Used in conjunction with M6 screws, it can also be installed in front of the cabinet and used as the front panel of the cabinet
- The unified standard for the surface of profile EMC blind plates is anodizing, and customers can also customize spraying, drilling, and screen printing according to their needs

Delivery includes

Name	Qty	Model	Description
Profile blind plate	1	/	Profile panel, suitable for the front panel of the cabinet chassis
EMC textile gasket	2	Choice	Conductive foam that meets EMC electromagnetic compatibility
Screw assembly	4	/	Install panel accessories

Order information

Height	H	D	Thick 3mm Anodized treatment
U	mm	mm	Order no
1U	43.6	31.7	02013000
2U	88.1	76.2	02023000
3U	132.5	57.1	02033000
4U	177.0	101.6	02043000
5U	221.4	146.0	02053000

Installation diagram of EMC textile gasket

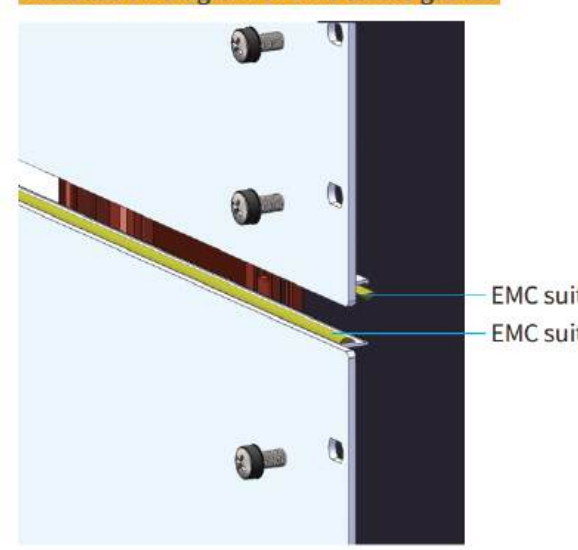

EMC Suite Ordering Information

Name	Order no
Profile blind plate	1008074

19"CUR Subrack accessory

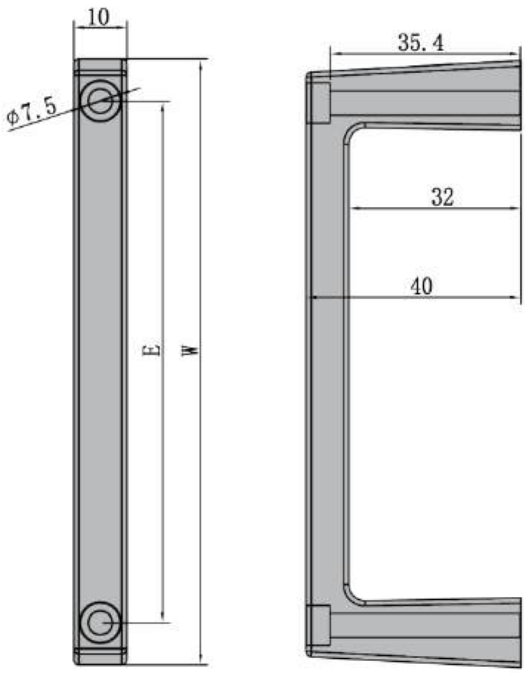

Hanlbe

- Installed on the chassis front flange or chassis side panel

Delivery includes

Ltem	Name	Description
1	Handle	Front handle, extruded aluminum, anodized

Order information

Height	W mm	E mm	Order no
1U	43	28	1030069
2U	71.01	52.8	1030070
3U	113	97.3	1030071
4U	157.45	141.8	1030072
5U	201.9	186.3	1030073

SNCF Series Subracks

SNCF Shielded Subracks

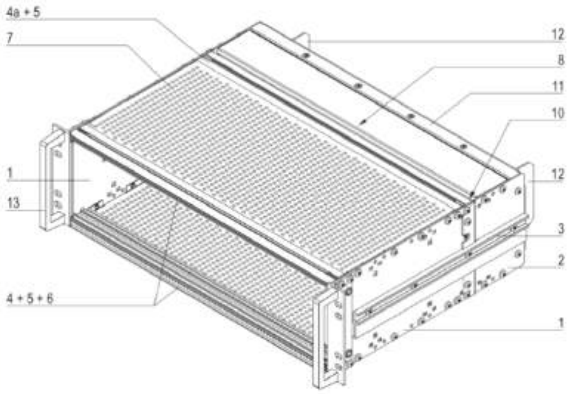

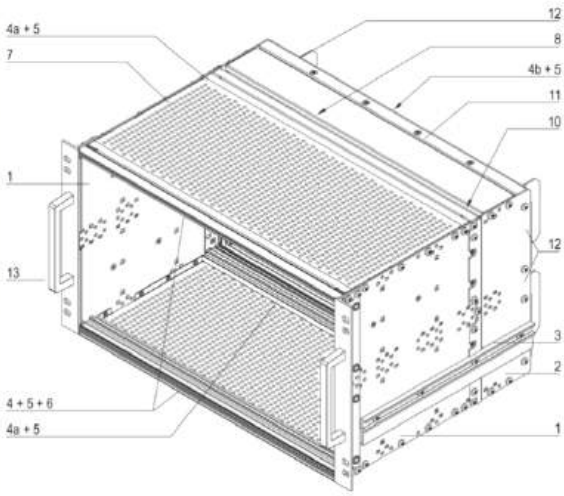

SNCF Subracks, Shielding Protection

- Tested according to NF F61-005 and NF F60-002 standards
- 3U, 6U, 21T,320mm deep, for board depth 220mm
- 1T=4HP

Delivery Comprises(kit)

Item	3U Qty	6U Qty	Description
1	2	2	Side panel, 19"support bracket
2	2	2	Side panel extension
3	2	2	External guide rail
4	2	2	Front rails
4a	2	2	Rear rails
4b	-	1	Middle rails
5	4	6	Threaded insert
6	2	2	Perforated strip
7	2	2	EMC Cover plate
8	2	2	EMC Rear cover plate
9	1	1	EMC kit for gasketing
10	1	2	Backplane shielding kit
11	1	2	Rear frame
12	2	4	Protective bracket
13	2	2	Handles
14	1	1	Assembly part kit with self-locking screws

Order information

Height	Width	Depth	Order no
3U	84HP	320	83843201
6U	84HP	320	86843201

瑞德科诺 RDEKON

SNCF CPCI Shielded Subracks

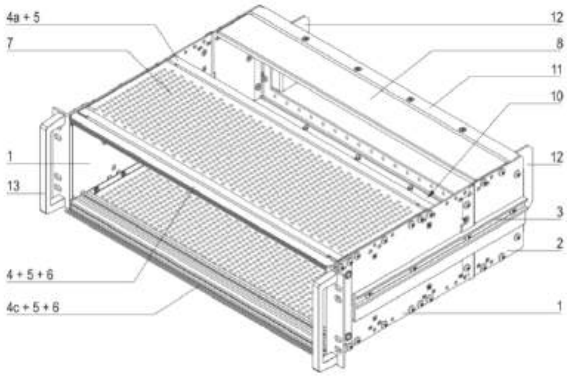

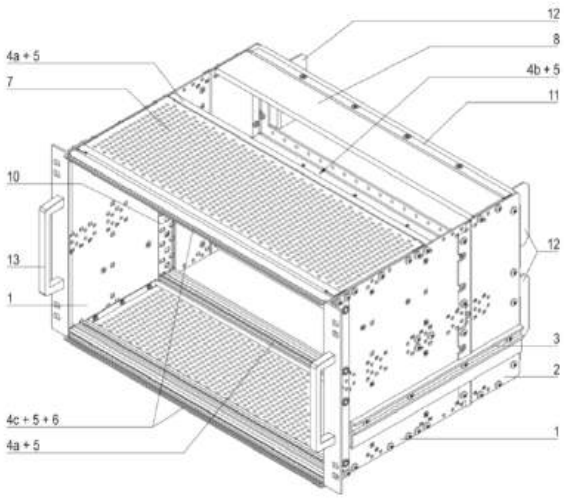

SNCF Subracks, CPCI Shielded Protection

- Tested according to NF F61-005 and NF F60-002 standards
- 3U, 6U, 21T,320mm deep, for board depth 160mm
- Subracks compliant with IEEE 1101.10 standard for Compact PCI systems

Delivery Comprises(kit)

Item	3U Qty	6U Qty	Description
1	2	2	Side panel, 19"support bracket
2	2	2	Side panel extension
3	2	2	External guide rail
4	1	-	Front rails
4a	2	2	Rear rails
4b	-	1	Middle rails
4c	1	2	Front horizontal Rail
5	4	6	Threaded insert
6	2	2	Perforated strip
7	2	2	EMC Cover plate
8	2	2	EMC Rear cover plate
9	1	1	EMC kit for gasketing
10	1	2	Backplane shielding kit
11	1	2	Rear frame
12	2	4	Protective bracket
13	2	2	Handles
14	1	1	Assembly part kit with self-locking screws

Order information

H Height	HP Width	Depth mm	Order no
3U	84HP	320	83843202
6U	84HP	320	86843202

Subracks mounting accessories (optional)

Item	Description	Order no
1	ESD clips for guide rails	1010003
2	ESD clips for alignment pin of the CompactPCI/VME64X handles	1010001
3	Pan head screw with Torx M2.5X10	1004014
4	CompacPCI/VME64x System Board Guide rail, Comply with IEEE1101.10/11 s tandard, The slot is 2mm wide, and can be installed with microswitch and anti misplug coding key. It is used to install the card with 160mm depth, red	1001020
5	CompacPCI/VME64x System Board Guide rail, Comply with IEEE1101.10/11 s tandard, The slot is 2mm wide, and can be installed with microswitch and anti misplug coding key. It is used to install the card with 160mm depth, Grey	1001118
6	CompacPCI/VME64x System Board Guide rail, Comply with IEEE1101.10/11 s tandard, The slot is 2mm wide, and can be installed with microswitch and anti misplug coding key. It is used to install the card with 162mm depth, Green	1001117

SNCF Series Subracks

SNCF Unshielded Subracks

SNCF Subracks, Unshielded protect

- Tested according to EN 50155 standard
- 3U, 6U, 84HP,235mm deep, for board depth 220mm

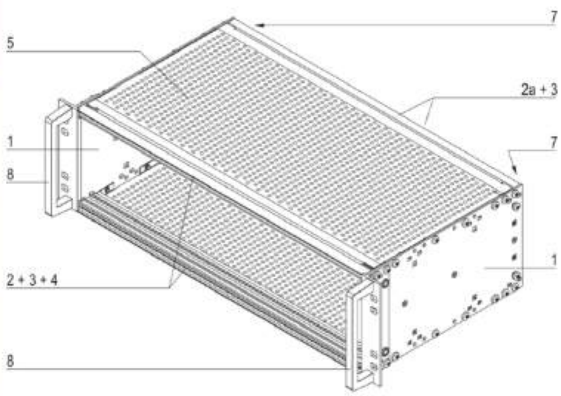

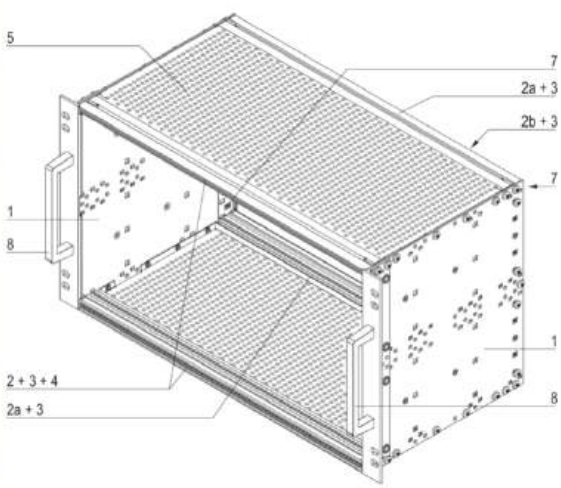

Delivery Comprises(kit)

Item	3U Qty	6U Qty	Description
1	2	2	Side panel, 19"support bracket
2	2	2	Front rails
2a	2	2	Rear rails
2b	-	1	Middle rails
3	4	6	Threaded insert
4	2	2	Perforated strip
5	2	2	Cover plate
6	1	1	Shielding tape
7	1	2	Shielding tape, Shielding protection for backplane
8	2	2	Handles
9	1	1	Assembly part kit with self-locking screws

Order information

Height	Width	Depth mm	Order no
3U	84HP	235	83842353
6U	84HP	235	86842353

SNCF EMC Shielded Subracks

SNCF Subracks, EMC Shielded Protection

- Tested according to NF F61-005 and NF F60-002 standards
- 3U, 6U, 84HP,235mm deep, for board depth 160mm
- Subracks compliant with IEEE 1101.10 standard for CompactCPI systems

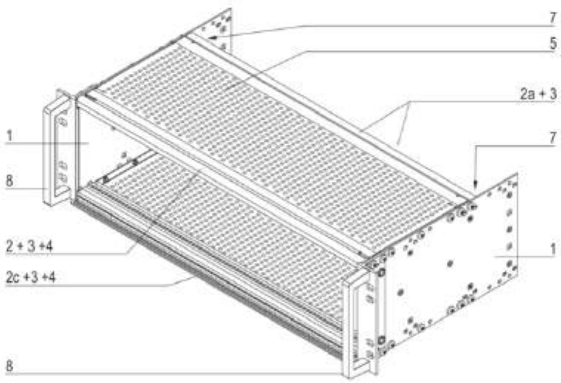

Delivery Comprises(kit)

Item	3U Qty	6U Qty	Description
1	2	2	Side panel, 19"support bracket
2	1	-	Front rails
2a	2	2	Rear rails
2b	-	1	Middle rails
2c	1	2	Front rails
3	4	6	Threaded insert
4	2	2	Perforated strip
5	2	2	Cover plate
6	1	1	Shielding tape
7	1	2	Shielding tape, Shielding protection for backplane
8	2	2	Handles
9	1	1	Assembly part kit with self-locking screws

Order information

H Height	HP Width	Depthmm	Order no
3U	84HP	320	83842354
6U	84HP	320	86842354

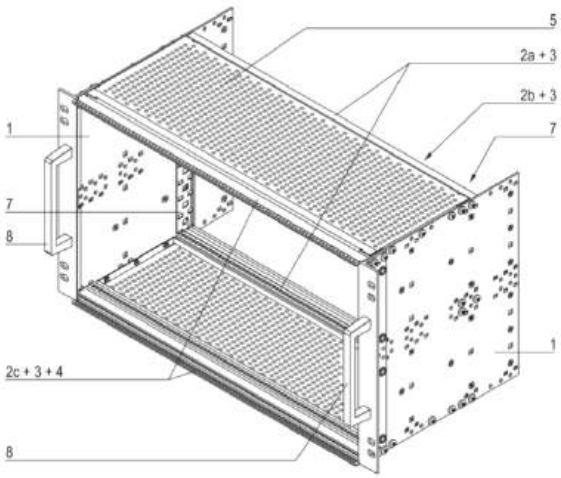

Shielded plug-in units Series Subracks

瑞德科诺 RDEKON

Physically protected Shielded plug-in units

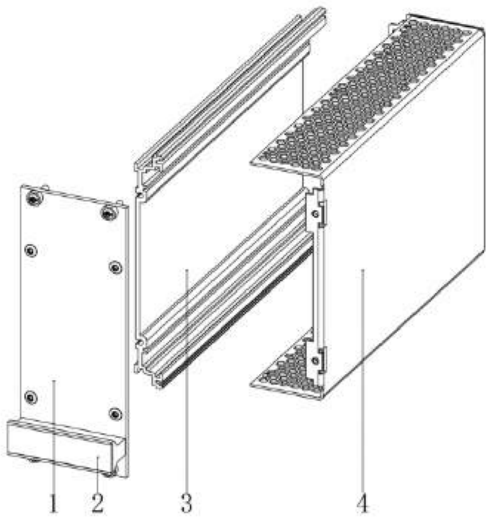

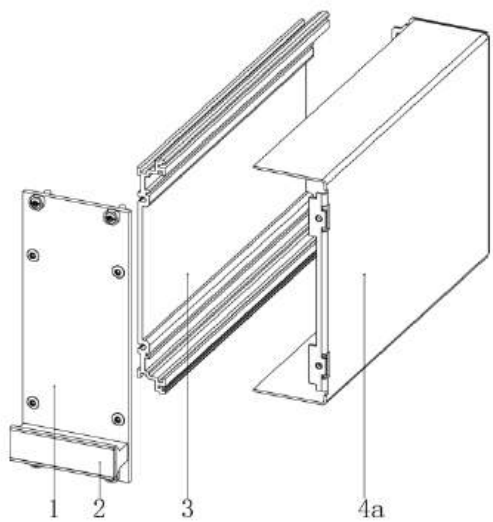

3U Physically protected Shielded plug-in units

- For circuit board protection against physical damage and mechanical damage
- Front panel is shielded or unshielded
- Suitable for Subrack cases and instrument cases
- Use PCB board size: 100x160 or 100x220
- When using this Shielded plug-in units, the type of connector should comply with EN 60603 (DIN 41612), types:B,C,D,F,H,R standard
- The height of the components on the PCB is <8.5mm when the 5HP module box is selected

Delivery includes

Item	Qty	Description
1	1	Shielded: front panel with slots forcontact strips
2	1	Handle, aluminum
3	1	Side panel, aluminum
4	1	Cover plate, aluminum, 1mm,Perforated
4a	1	Cover plate, aluminum, 1mm,Without holes
5	1	Assembly part kit with self-locking screws

Order information

Width A HP	Description	Model	Order no (Depth167mm)	Order no (Depth227mm)
5	Shielded	Perforated	30516711	30522711
5	Shielded	Without holes	30516701	30522701
6	Shielded	Perforated	30616711	30622711
6	Shielded	Without holes	30616701	30622701
7	Shielded	Perforated	30716711	30722711
7	Shielded	Without holes	30716701	30722701
8	Shielded	Perforated	30816711	30822711
8	Shielded	Without holes	30816701	30822701
10	Shielded	Perforated	31016711	31022711
10	Shielded	Without holes	31016701	31022701
12	Shielded	Perforated	31216711	31222711
12	Shielded	Without holes	31216701	31222701
14	Shielded	Perforated	31416711	31422711
14	Shielded	Without holes	31416701	31422701
21	Shielded	Perforated	32116711	32122711
21	Shielded	Without holes	32116701	32122701
28	Shielded	Perforated	32816711	32822711
28	Shielded	Without holes	32816701	32822701
42	Shielded	Perforated	34216711	34222711
42	Shielded	Without holes	34216701	34222701

Shielded plug-in units Series Subracks

瑞德科诺 RDEKON

Physically protected Shielded plug-in units

Cut-SIze

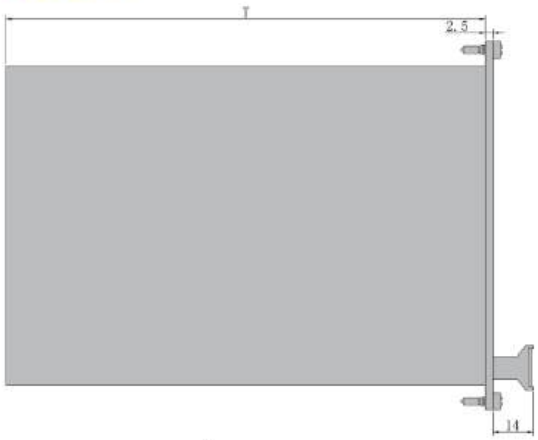

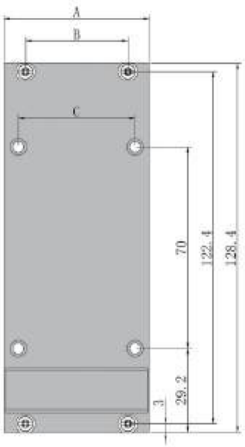

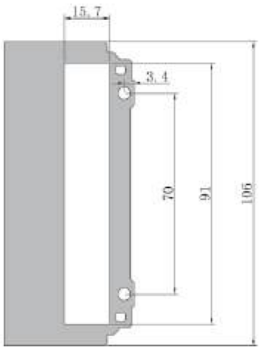

Order information

Width A HP	Description	Model	Order no T (Depth167mm)	Order no T (Depth227mm)
5	Unshielded	Perforated	30516710	30522710
5	Unshielded	Without holes	30516700	30522700
6	Unshielded	Perforated	30616710	30622710
6	Unshielded	Without holes	30616700	30622700
7	Unshielded	Perforated	30716710	30722710
7	Unshielded	Without holes	30716700	30722700
8	Unshielded	Perforated	30816710	30822710
8	Unshielded	Without holes	30816700	30822700
10	Unshielded	Perforated	31016710	31022710
10	Unshielded	Without holes	31016700	31022700
12	Unshielded	Perforated	31216710	31222710
12	Unshielded	Without holes	31216700	31222700
14	Unshielded	Perforated	31416710	31422710
14	Unshielded	Without holes	31416700	31422700
21	Unshielded	Perforated	32116710	32122710
21	Unshielded	Without holes	32116700	32122700
28	Unshielded	Perforated	32816710	32822710
28	Unshielded	Without holes	32816700	32822700
42	Unshielded	Perforated	34216710	34222710
42	Unshielded	Without holes	34216700	34222700

Shielded plug-in units Series Subracks

Physically protected Shielded plug-in units

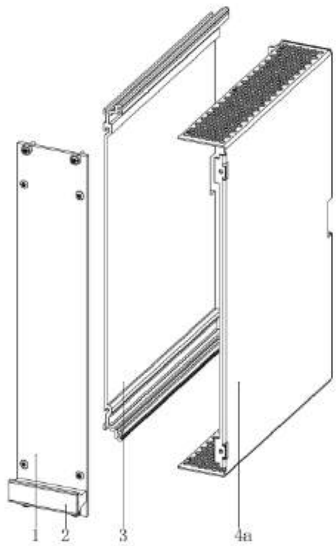

6U Physically protected Shielded plug-in units

- For circuit board protection against physical damage and mechanical damage
- Front panel is shielded or unshielded
- Suitable for Subrack cases and instrument cases
- Use PCB board size: 100x160 or 100x220
- When using this Shielded plug-in units, the type of connector should comply with EN 60603 (DIN 41612), types:B,C,D,F,H,R standard
- The height of the components on the PCB is <8.5mm when the 5HP module box is selected

Delivery includes

Item	Qty	Description
1	1	Shielded: front panel with slots forcontact strips
2	1	Handle, aluminum
3	1	Side panel, aluminum
4	1	Cover plate, aluminum, 1mm,Perforated
4a	1	Cover plate panel, aluminum, 1mm,Without holes
5	1	Assembly part kit with self-locking screws

Order information

Width A HP	Description	Model	Order no (Depth167mm)	Order no (Depth227mm)
5	Shielded	Perforated	60516711	60522711
5	Shielded	Without holes	60516701	60522701
6	Shielded	Perforated	60616711	60622711
6	Shielded	Without holes	60616701	60622701
7	Shielded	Perforated	60716711	60722711
7	Shielded	Without holes	60716701	60722701
8	Shielded	Perforated	60816711	60822711
8	Shielded	Without holes	60816701	60822701
10	Shielded	Perforated	61016711	61022711
10	Shielded	Without holes	61016701	61022701
12	Shielded	Perforated	61216711	61222711
12	Shielded	Without holes	61216701	61222701
14	Shielded	Perforated	61416711	61422711
14	Shielded	Without holes	61416701	61422701
21	Shielded	Perforated	62116711	62122711
21	Shielded	Without holes	62116701	62122701
28	Shielded	Perforated	62816711	62822711
28	Shielded	Without holes	62816701	62822701
42	Shielded	Perforated	64216711	64222711
42	Shielded	Without holes	64216701	64222701

Shielded plug-in units Series Subracks

瑞德科诺 RDEKON

Physically protected Shielded plug-in units

Cut-SIze

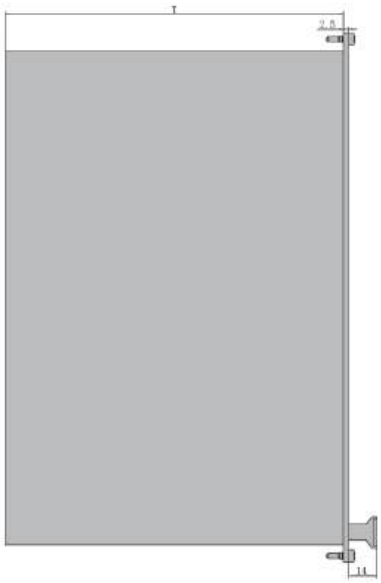

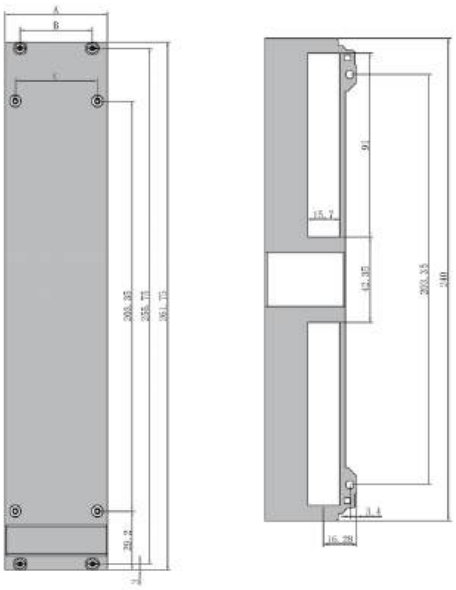

Order information

Width A HP	Description	Model	Order no T (Depth167mm)	Order no T (Depth227mm)
5	Unshielded	Perforated	60516710	60522710
5	Unshielded	Without holes	60516700	60522700
6	Unshielded	Perforated	60616710	60622710
6	Unshielded	Without holes	60616700	60622700
7	Unshielded	Perforated	60716710	60722710
7	Unshielded	Without holes	60716700	60722700
8	Unshielded	Perforated	60816710	60822710
8	Unshielded	Without holes	60816700	60822700
10	Unshielded	Perforated	61016710	61022710
10	Unshielded	Without holes	61016700	61022700
12	Unshielded	Perforated	61216710	61222710
12	Unshielded	Without holes	61216700	61222700
14	Unshielded	Perforated	61416710	61422710
14	Unshielded	Without holes	61416700	61422700
21	Unshielded	Perforated	62116710	62122710
21	Unshielded	Without holes	62116700	62122700
28	Unshielded	Perforated	62816710	62822710
28	Unshielded	Without holes	62816700	62822700
42	Unshielded	Perforated	64216710	64222710
42	Unshielded	Without holes	64216700	64222700

Framing shielded plug-in units

3U Framing shielded plug-in units

- For circuit board protection against physical damage and mechanical damage
- Front panel is shielded or unshielded
- Suitable for Subrack cases and instrument cases
- Use PCB board size: 100x160 or 100x220
- When using this Shielded plug-in units, the type of connector should comply with EN 60603 (DIN 41612), types:B,C,D,F,H,R standard

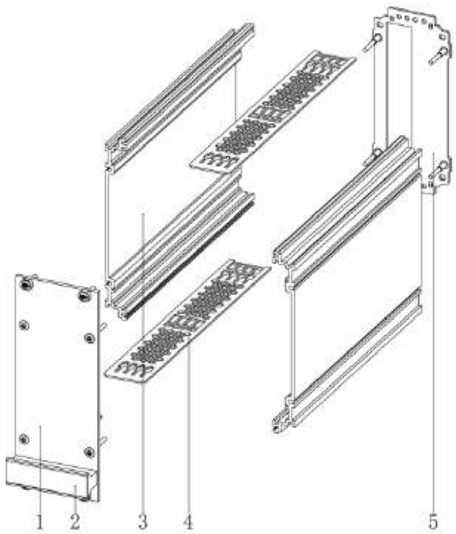

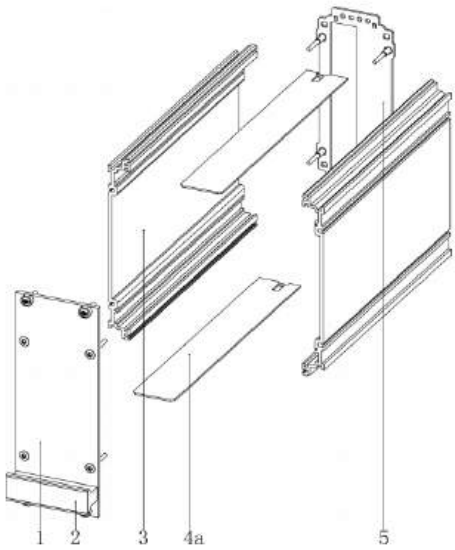

Delivery includes

Item	Qty	Description
1	1	Shielded: front panel with slots forcontact strips
2	1	Handle, aluminum
3	1	Side panel, aluminum
4	1	Cover plate, aluminum, 1mm,Perforated
4a	1	Cover plate, aluminum, 1mm,Without holes
5	1	Rear panel, aluminum, 1.5mm
6	1	Assembly part kit with self-locking screws

Order information

Width A HP	Description	Model	Order no (Depth167mm)	Order no (Depth227mm)
7	Shielded	Perforated	30716731	30722731
7	Shielded	Without holes	30716721	30722721
8	Shielded	Perforated	30816731	30822731
8	Shielded	Without holes	30816721	30822721
10	Shielded	Perforated	31016731	31022731
10	Shielded	Without holes	31016721	31022721
12	Shielded	Perforated	31216731	31222731
12	Shielded	Without holes	31216721	31222721
14	Shielded	Perforated	31416731	31422731
14	Shielded	Without holes	31416721	31422721
21	Shielded	Perforated	32116731	32122731
21	Shielded	Without holes	32116721	32122721
28	Shielded	Perforated	32816731	32822731
28	Shielded	Without holes	32816721	32822721
42	Shielded	Perforated	34216731	34222731
42	Shielded	Without holes	34216721	34222721

Framing shielded plug-in units

Cut-SIze

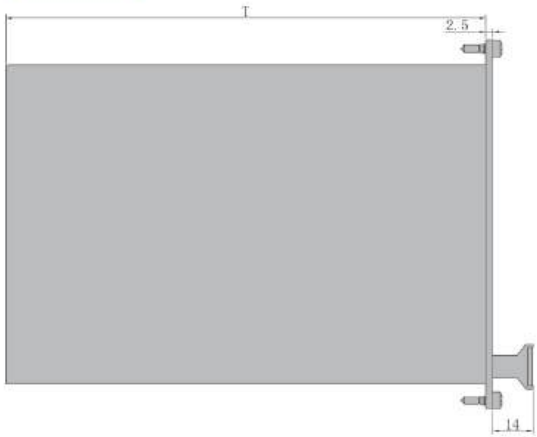

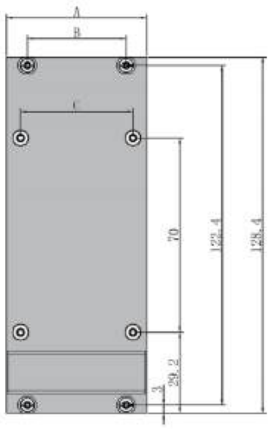

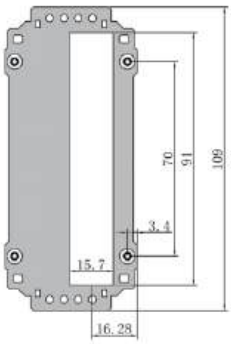

Order information

Width A HP	Description	Model	Order no T (Depth167mm)	Order no T (Depth227mm)
7	Unshielded	Perforated	30716730	30722730
7	Unshielded	Without holes	30716720	30722720
8	Unshielded	Perforated	30816730	30822730
8	Unshielded	Without holes	30816720	30822720
10	Unshielded	Perforated	31016730	31022730
10	Unshielded	Without holes	31016720	31022720
12	Unshielded	Perforated	31216730	31222730
12	Unshielded	Without holes	31216720	31222720
14	Unshielded	Perforated	31416730	31422730
14	Unshielded	Without holes	31416720	31422720
21	Unshielded	Perforated	32116730	32122730
21	Unshielded	Without holes	32116720	32122720
28	Unshielded	Perforated	32816730	32822730
28	Unshielded	Without holes	32816720	32822720
42	Unshielded	Perforated	34216730	34222730
42	Unshielded	Without holes	34216720	34222720

Shielded plug-in units Series Subracks

瑞德科诺 RDEKON

Framing shielded plug-in units

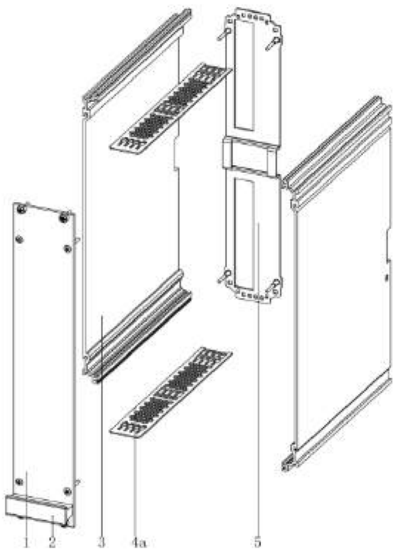

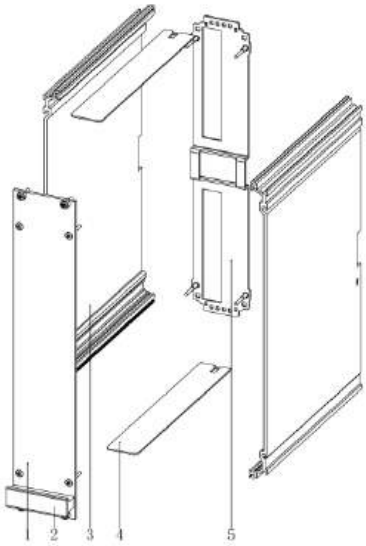

6U Framing shielded plug-in units

- For circuit board protection against physical damage and mechanical damage
- Front panel is shielded or unshielded
- Suitable for Subrack cases and instrument cases
- Use PCB board size: 100x160 or 100x220
- When using this Shielded plug-in units, the type of connector should comply with EN 60603 (DIN 41612), types:B,C,D,F,H,R standard

Delivery includes

Item	Qty	Description
1	1	Shielded: front panel with slots forcontact strips
2	1	Handle, aluminum
3	1	Side panel, aluminum
4	1	Cover plate, aluminum, 1mm,Perforated
4a	1	Cover plate, aluminum, 1mm,Without holes
5	1	Rear panel, aluminum, 1.5mm
6	1	Assembly part kit with self-locking screws

Order information

Width A HP	Description	Model	Order no (Depth167mm)	Order no (Depth227mm)
7	Shielded	Perforated	60716731	60722731
7	Shielded	Without holes	60716721	60722721
8	Shielded	Perforated	60816731	60822731
8	Shielded	Without holes	60816721	60822721
10	Shielded	Perforated	61016731	61022731
10	Shielded	Without holes	61016721	61022721
12	Shielded	Perforated	61216731	61222731
12	Shielded	Without holes	61216721	61222721
14	Shielded	Perforated	61416731	61422731
14	Shielded	Without holes	61416721	61422721
21	Shielded	Perforated	62116731	62122731
21	Shielded	Without holes	62116721	62122721
28	Shielded	Perforated	62816731	62822731
28	Shielded	Without holes	62816721	62822721
42	Shielded	Perforated	64216731	64222731
42	Shielded	Without holes	64216721	64222721

Shielded plug-in units Series Subracks

Framing shielded plug-in units

Cut-SIze

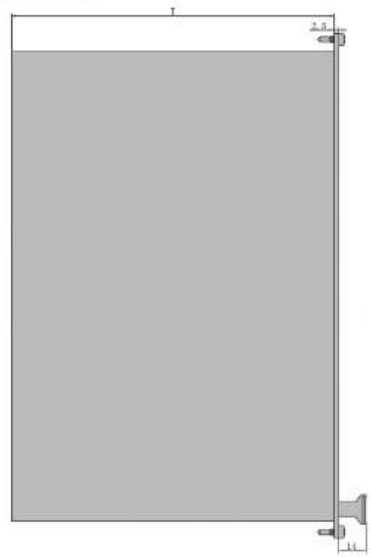

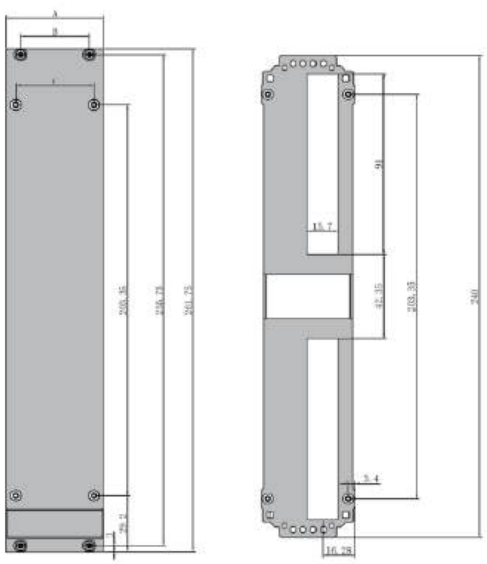

Order information

Width A HP	Description	Model	Order no T (Depth167mm)	Order no T (Depth227mm)
7	Unshielded	Perforated	60716730	60722730
7	Unshielded	Without holes	60716720	60722720
8	Unshielded	Perforated	60816730	60822730
8	Unshielded	Without holes	60816720	60822720
10	Unshielded	Perforated	61016730	61022730
10	Unshielded	Without holes	61016720	61022720
12	Unshielded	Perforated	61216730	61222730
12	Unshielded	Without holes	61216720	61222720
14	Unshielded	Perforated	61416730	61422730
14	Unshielded	Without holes	61416720	61422720
21	Unshielded	Perforated	62116730	62122730
21	Unshielded	Without holes	62116720	62122720
28	Unshielded	Perforated	62816730	62822730
28	Unshielded	Without holes	62816720	62822720
42	Unshielded	Perforated	64216730	64222730
42	Unshielded	Without holes	64216720	64222720

Series Subracks with Framed Multi Board Cards

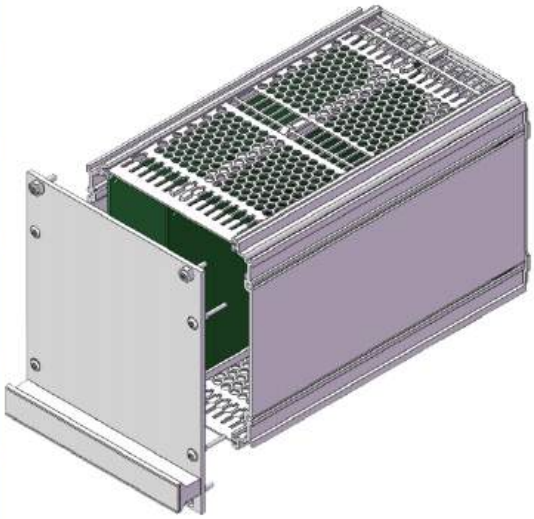

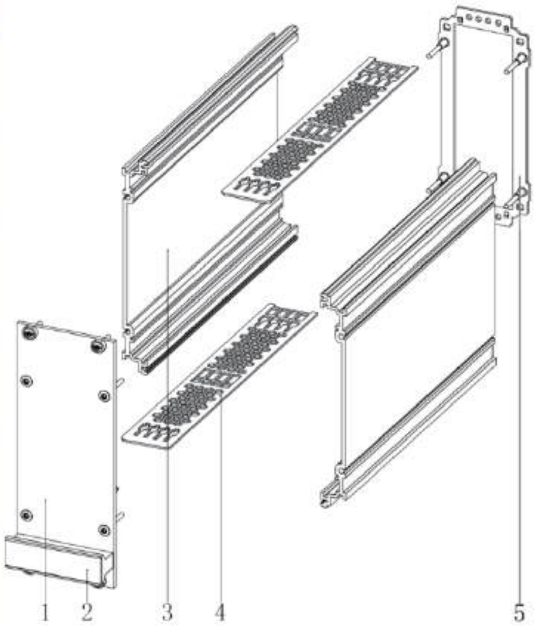

3U Series Subracks with Framed Multi Board Cards

- Prevent PCB from mechanical damage and static accumulation;
- Applicable to European plate specifications; Paired with panels with multiple connector openings
- A board without a rear connector requires a guide rail (part number 1001169) and "required card fasteners for slot 2" (part number rear panel fastener 1015026+screw part number 1004241), which already includes a PCB fixing device (see page 108 for details of the PCB fixing device)

Delivery includes

Item	Qty	Description
1	1	Shielded plug-in units Series Subracks front panel, shielded or unshielded protection
2	1	Pulling handle, aluminum
3	2	Side panel, aluminum profile
4	2	Cover plate, aluminum, 1mm, with perforations and ventilation holes
5	1	Rear panel, aluminum, 1.5mm, with openings suitable for multiple connectors
6	1	Assembly components, including assembly screws and PCB fixing devices PCB fixing device: includes 2 guide rails, 2 2-slot PCB mounting brackets, and a PCB rear fixing block for slot 1 (the PCB rear fixing block is divided into two types: PCB fixing block plastic parts and PCB upper and lower fixing block die-casting parts, which customers can choose from at will)

Order information

Width A HP	Description	Model Fixings	Model	Order no (Depth 167mm)	Order no (Depth 227mm)
8	Shielded	Plastic	Perforated	30836731	30832731
8	Shielded	Die-casting	Perforated	30846731	30842731
10	Shielded	Plastic	Perforated	31036731	31032731
10	Shielded	Die-casting	Perforated	31046731	31042731
12	Shielded	Plastic	Perforated	31236731	31232731
12	Shielded	Die-casting	Perforated	31246731	31242731
14	Shielded	Plastic	Perforated	31436731	31432731
14	Shielded	Die-casting	Perforated	31446731	31442731
21	Shielded	Plastic	Perforated	32136731	32132731
21	Shielded	Die-casting	Perforated	32146731	32142731
28	Shielded	Plastic	Perforated	32836731	32832731
28	Shielded	Die-casting	Perforated	32846731	32842731
42	Shielded	Plastic	Perforated	34236731	34232731
42	Shielded	Die-casting	Perforated	34246731	34242731

Shielded plug-in units Series Subracks

Series Subracks with Framed Multi Board Cards

Cut-SIze

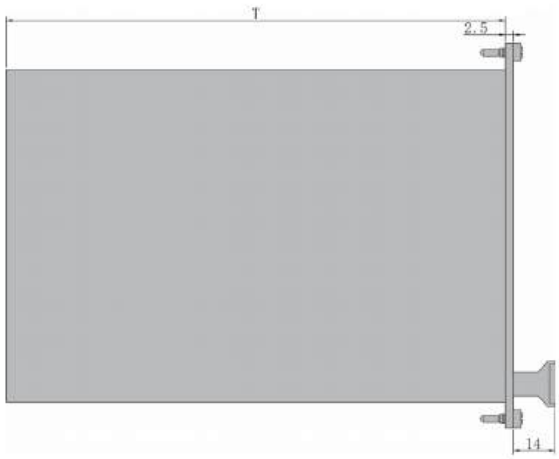

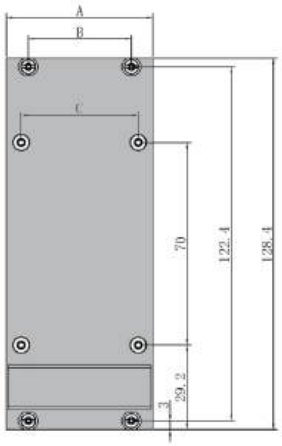

Order information

Width A HP	Description	Model Fixings	Model	Order no (Depth 167mm)	Order no (Depth 227mm)
8	Unshielded	Plastic	Perforated	30836730	30832730
8	Unshielded	Die-casting	Perforated	30846730	30842730
10	Unshielded	Plastic	Perforated	31036730	31032730
10	Unshielded	Die-casting	Perforated	31046730	31042730
12	Unshielded	Plastic	Perforated	31236730	31232730
12	Unshielded	Die-casting	Perforated	31246730	31242730
14	Unshielded	Plastic	Perforated	31436730	31432730
14	Unshielded	Die-casting	Perforated	31446730	31442730
21	Unshielded	Plastic	Perforated	32136730	32132730
21	Unshielded	Die-casting	Perforated	32146730	32142730
28	Unshielded	Plastic	Perforated	32836730	32832730
28	Unshielded	Die-casting	Perforated	32846730	32842730
42	Unshielded	Plastic	Perforated	34236730	34232730
42	Unshielded	Die-casting	Perforated	34246730	34242730

Shielded plug-in units Series Subracks

Series Subracks with Framed Multi Board Cards

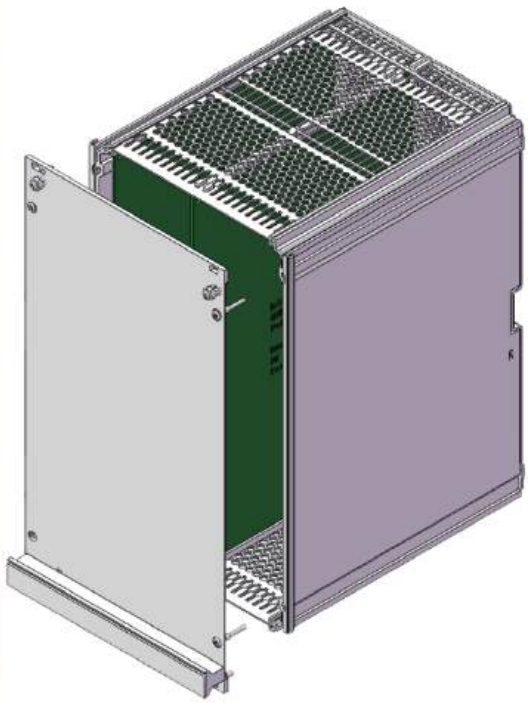

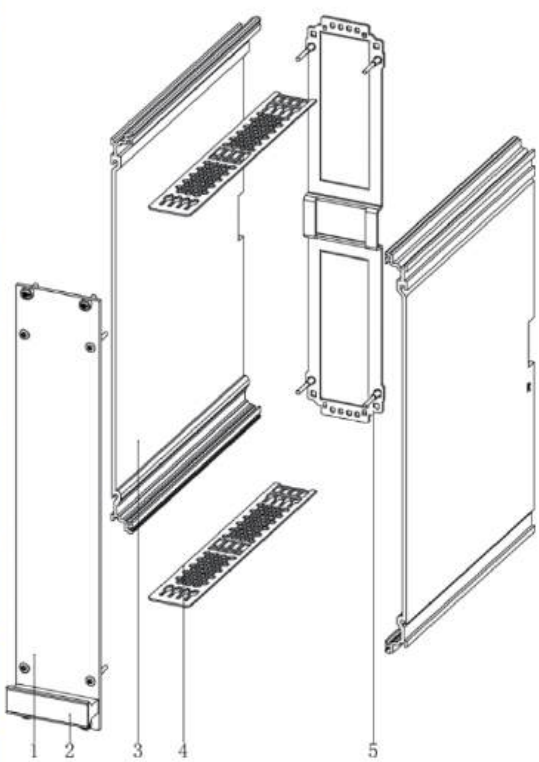

6U Series Subracks with Framed Multi Board Cards

- Prevent PCB from mechanical damage and static accumulation;
- Applicable to European plate specifications; Paired with panels with multiple connector openings
- A board without a rear connector requires a guide rail (part number 1001169) and "required card fasteners for slot 2" (part number rear panel fastener 1015026+screw part number 1004241), which already includes a PCB fixing device (see page 108 for details of the PCB fixing device)

Delivery includes

Item	Qty	Description
1	1	Shielded plug-in units Series Subracks front panel, shielded or unshielded protection
2	1	Pulling handle, aluminum
3	2	Side panel, aluminum profile
4	2	Cover plate, aluminum, 1mm, with perforations and ventilation holes
5	1	Rear panel, aluminum, 1.5mm, with openings suitable for multiple connectors
6	1	Assembly components, including assembly screws and PCB fixing devices PCB fixing device: includes 2 guide rails, 2 2-slot PCB mounting brackets, and a PCB rear fixing block for slot 1 (the PCB rear fixing block is divided into two types: PCB fixing block plastic parts and PCB upper and lower fixing block die-casting parts, which customers can choose from at will)

Order information

Width A HP	Description	Model Fixings	Model	Order no (Depth 167mm)	Order no (Depth 227mm)
8	Shielded	Plastic	Perforated	60836731	60832731
8	Shielded	Die-casting	Perforated	60846731	60842731
10	Shielded	Plastic	Perforated	61036731	61032731
10	Shielded	Die-casting	Perforated	61046731	61042731
12	Shielded	Plastic	Perforated	61236731	61232731
12	Shielded	Die-casting	Perforated	61246731	61242731
14	Shielded	Plastic	Perforated	61436731	61432731
14	Shielded	Die-casting	Perforated	61446731	61442731
21	Shielded	Plastic	Perforated	62136731	62132731
21	Shielded	Die-casting	Perforated	62146731	62142731
28	Shielded	Plastic	Perforated	62836731	62832731
28	Shielded	Die-casting	Perforated	62846731	62842731
42	Shielded	Plastic	Perforated	64236731	64232731
42	Shielded	Die-casting	Perforated	64246731	64242731

瑞德科诺 RDEKON

Series Subracks with Framed Multi Board Cards

Cut-SIze

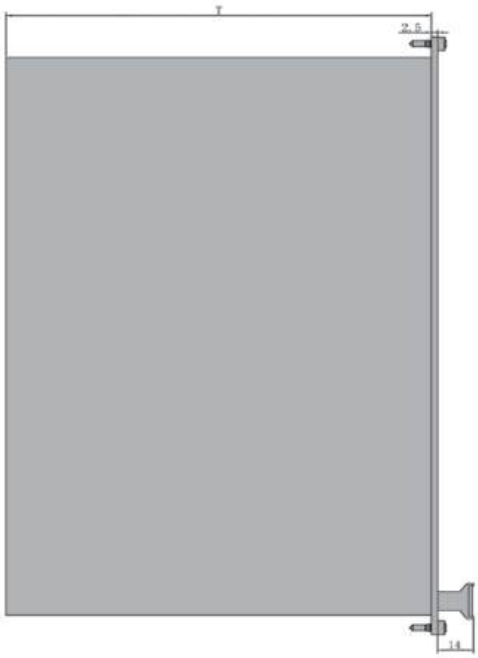

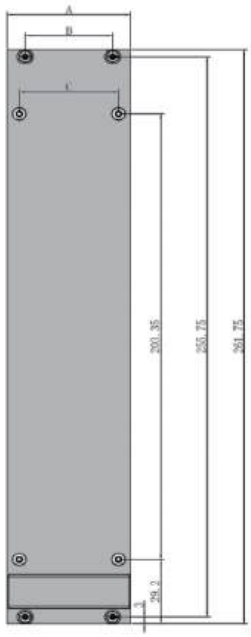

Order information

Width A HP	Description	Model Fixings	Model	Order no (Depth 167mm)	Order no (Depth 227mm)
8	Unshielded	Plastic	Perforated	60836730	60832730
8	Unshielded	Die-casting	Perforated	60846730	60842730
10	Unshielded	Plastic	Perforated	61036730	61032730
10	Unshielded	Die-casting	Perforated	61046730	61042730
12	Unshielded	Plastic	Perforated	61236730	61232730
12	Unshielded	Die-casting	Perforated	61246730	61242730
14	Unshielded	Plastic	Perforated	61436730	61432730
14	Unshielded	Die-casting	Perforated	61446730	61442730
21	Unshielded	Plastic	Perforated	62136730	62132730
21	Unshielded	Die-casting	Perforated	62146730	62142730
28	Unshielded	Plastic	Perforated	62836730	62832730
28	Unshielded	Die-casting	Perforated	62846730	62842730
42	Unshielded	Plastic	Perforated	64236730	64232730
42	Unshielded	Die-casting	Perforated	64246730	64242730

Shielded plug-in units accessories

Framing shielded plug-in units multiple PCB board installation components

- Suitable for installation of multi PCB boards with Shielded plug-in units width>7HP

Framing shielded plug-in units guide rail

- The guide rail can be installed on the cut-out upper and lower cover plates
- This device is required if the PCB is to be assembled from slot 2
- The guide rails are suitable for 167mm and 227 deep module boxes

PCB Up and down printed board

- The PCB is inserted into the rails of shielded plug-in units
- Secure when installing rear panel

PCB Rear printed board bracket

- Insert the PCB into the guide groove in the rear corner of the left or right board
- Secure when installing rear panel

Rear panel fasteners

- Cover for plug-in units with guide rail perforations
- For improved EMC contact between rear panel and cover

2-slot PCB board installation bracket

- Suitable for modular boxes with guide rails

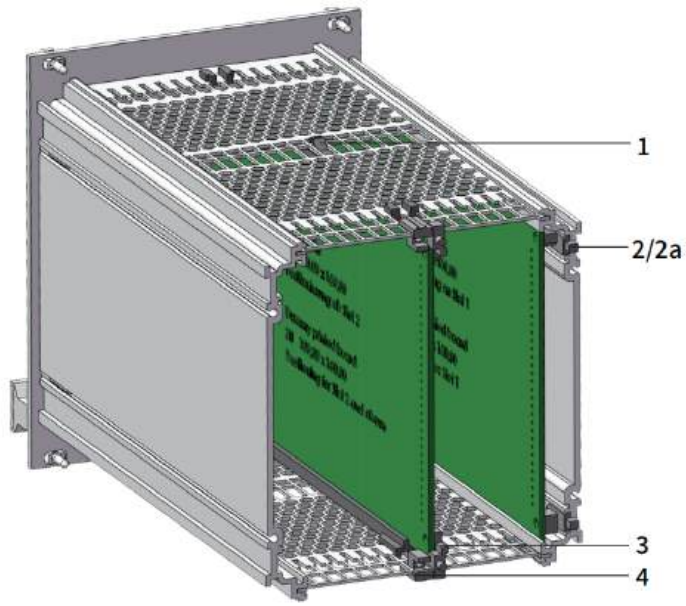

Framing shielded plug-in units guide rail

PCB Up and down printed board bracket

PCB Rear printed board bracket

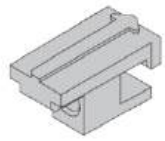

Rear panel fasteners

2-slot PCB board installation bracket

Delivery Comprises(kit)

Ltem	Name	Qty	Order no	Description
1	Framing shielded plug-in units guide rail	/	1001169	Fixed Shielded plug-in units PCB board, PBT, UL, 94, V-0, red
2	PCB Rear printed board bracket(Top)	1	1015018	Fix the PCB board on the side panel, plastic
2	PCB Rear printed board bracket(Bottom)	1	1015019	Fix the PCB board on the side panel, plastic
2a	PCB Up and down printed board bracket	1	1015022	Fix the PCB board on the side board and die-cast zinc
3	2-slot PCB board installation bracket(Top)	1	1015024	Fixed when installing the rear panel, die-cast zinc
3	2-slot PCB board installation bracket(Bottom)	1	1015024	Fixed when installing the rear panel, die-cast zinc
4	Rear panel fasteners	2	1015026	Used to connect the rear panel and cover plate, die-cast zinc

VERO Series Subracks

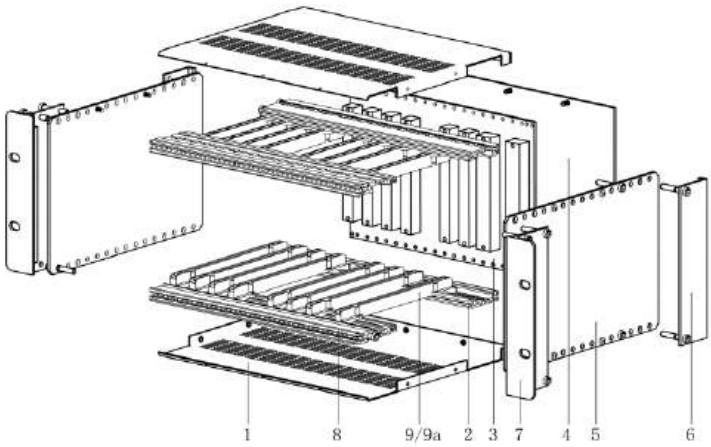

VERO Subracks

- Can be used to build CompactPCI system platforms with full mounting accessory support; for the application of
- mounting backplane or connector.

For rear panel installation, there is an insulating strip between the rear panel and the middle cross member; for connector installation, the connector type should comply with IEC60603-2/DIN 41612 standard.

Delivery Comprises(kit)

Item	Name	3U Qty	6U Qty	Model
1	Cover plate	2	2	/
2	Rear rails	2	2	/
3	Backplane	1	1	/
4	Rear panel	1	1	/
5	Side panel	2	2	/
6	Rear bracket	2	2	/
7	Front bracket	2	2	/
8	Front rails	2	2	/
9	Low guide rail	/	/	Choice
9a	High guide rail	/	/	Choice

Order information

H Height	W Width	D Depth	Model	Order no
3U	84TE	160	Perforated	31604202
3U	84TE	220	Perforated	32204202
4U	84TE	160	Perforated	41604212
4U	84TE	220	Perforated	42204213
6U	84TE	160	Perforated	61604212
6U	84TE	220	Perforated	62204213

Order information

Name	W Width	Order no	Name	H Height	Order no
Front rails	42TE	0180001	Front bracket	3U	0280001
Front rails	63TE	0180011	Front bracket	4U	0280002
Front rails	84TE	0180009	Front bracket	6U	0280003
Rear rails	42TE	0180002	Rear bracket	3U	0280004
Rear rails	63TE	0180012	Rear bracket	4U	0280005
Rear rails	84TE	0180010	Rear bracket	6U	0280006

VERO Series Subracks

Low guide rail

High guide rail

Order information

Name	D Depth	Color	Colour code	Order no
High guide rail	160	Green	RAL6024	1001022
Low guide rail	160	Green	RAL6024	1001024
Low guide rail	220	Green	RAL6024	1001023

VERO Series Subracks

VERO Shielded plug-in units

VERO 3U Shielded plug-in units

- For circuit board protection against physical damage and mechanical damage
- Front panel is shielded or unshielded
- Suitable for subrack cases and instrument cases

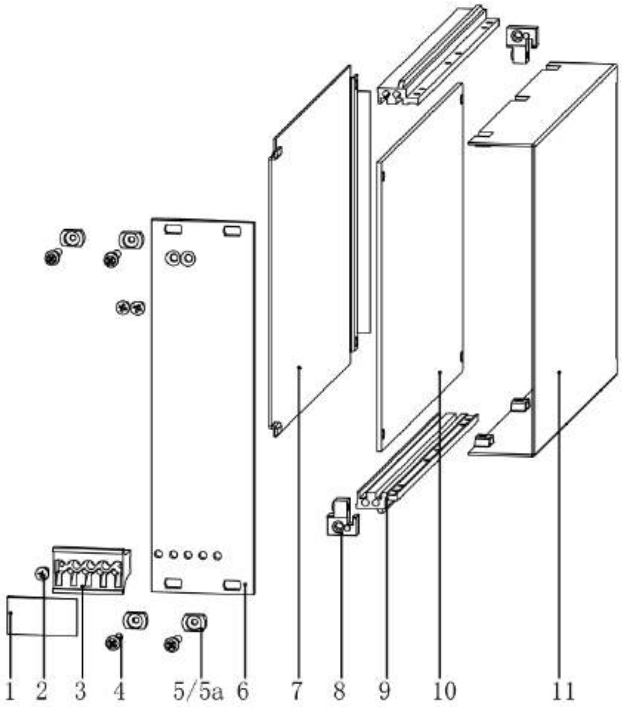

Delivery Comprises(kit)

Item	Name	3U Qty	Model
1	Scutcheon	1	/
2	Panel fixing screws	3	/
3	Black plastic handle	1	/
4	Captive screws	4	/
5	Metal sleeve plastic	4	/
5a	Metal sleeve Brass	4	/
6	Panel	1	/
7	Side panel	1	/
8	Printed board bracket	2	/
9	Guide rail	2	/
10	PCB Board	1	/
11	Cover plate	1	/

Order information

Width HP	Description	Model	Order no (Depth 167mm)	Order no (Depth 227mm)
5	Unshielded	Perforated	05316710	05322710
5	Unshielded	Without holes	05316700	05322700
6	Unshielded	Perforated	06316710	06322710
6	Unshielded	Without holes	06316700	06322700
7	Unshielded	Perforated	07316710	07322710
7	Unshielded	Without holes	07316700	07322700
8	Unshielded	Perforated	08316710	08322710
8	Unshielded	Without holes	08316700	08322700
10	Unshielded	Perforated	10316710	10322710
10	Unshielded	Without holes	10316700	10322700
12	Unshielded	Perforated	12316710	12322710
12	Unshielded	Without holes	12316700	12322700
14	Unshielded	Perforated	14316710	14322710
14	Unshielded	Without holes	14316700	14322700
21	Unshielded	Perforated	21316710	21322710
21	Unshielded	Without holes	21316700	21322700
28	Unshielded	Perforated	28316710	28322710
28	Unshielded	Without holes	28316700	28322700
42	Unshielded	Perforated	42316710	42322710
42	Unshielded	Without holes	42316700	42322700

Order information

Width HP	Description	Model	Order no (Depth 167mm)	Order no (Depth 227mm)
5	Shielded	Perforated	05316711	05322711
5	Shielded	Without holes	05316701	05322701
6	Shielded	Perforated	06316711	06322711
6	Shielded	Without holes	06316701	06322701
7	Shielded	Perforated	07316711	07322711
7	Shielded	Without holes	07316701	07322701
8	Shielded	Perforated	08316711	08322711
8	Shielded	Without holes	08316701	08322701
10	Shielded	Perforated	10316711	10322711
10	Shielded	Without holes	10316701	10322701
12	Shielded	Perforated	12316711	12322711
12	Shielded	Without holes	12316701	12322701
14	Shielded	Perforated	14316711	14322711
14	Shielded	Without holes	14316701	14322701
21	Shielded	Perforated	21316711	21322711
21	Shielded	Without holes	21316701	21322701
28	Shielded	Perforated	28316711	28322711
28	Shielded	Without holes	28316701	28322701
42	Shielded	Perforated	42316711	42322711
42	Shielded	Without holes	42316701	42322701

VERO Shielded plug-in units

VERO 6U Shielded plug-in units

- For circuit board protection against physical damage and mechanical damage
- Front panel is shielded or unshielded
- Suitable for subrack cases and instrument cases

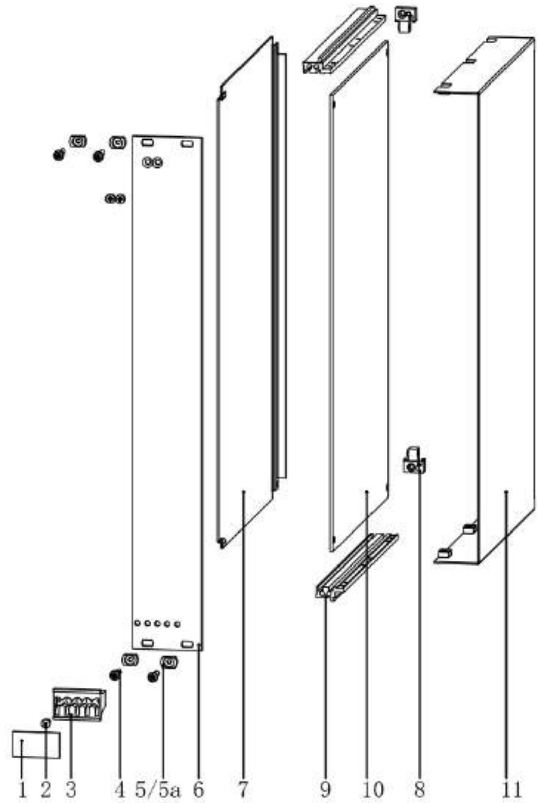

Delivery Comprises(kit)

Item	Name	3U Qty	Model
1	Scutcheon	1	/
2	Panel fixing screws	3	/
3	Black plastic handle	1	/
4	Captive screws	4	/
5	Metal sleeve plastic	4	/
5a	Metal sleeve Brass	4	/
6	Panel	1	/
7	Side panel	1	/
8	Printed board bracket	2	/
9	Guide rail	2	/
10	PCB Board	1	/
11	Cover plate	1	/

Order information

Width HP	Description	Model	Order no (Depth 167mm)	Order no (Depth 227mm)
5	Shielded	Perforated	05616711	05622711
5	Shielded	Without holes	05616701	05622701
6	Shielded	Perforated	06616711	06622711
6	Shielded	Without holes	06616701	06622701
7	Shielded	Perforated	07616711	07622711
7	Shielded	Without holes	07616701	07622701
8	Shielded	Perforated	08616711	08622711
8	Shielded	Without holes	08616701	08622701
10	Shielded	Perforated	10616711	10622711
10	Shielded	Without holes	10616701	10622701
12	Shielded	Perforated	12616711	12622711
12	Shielded	Without holes	12616701	12622701
14	Shielded	Perforated	14616711	14622711
14	Shielded	Without holes	14616701	14622701
21	Shielded	Perforated	21616711	21622711
21	Shielded	Without holes	21616701	21622701
28	Shielded	Perforated	28616711	28622711
28	Shielded	Without holes	28616701	28622701
42	Shielded	Perforated	42616711	42622711
42	Shielded	Without holes	42616701	42622701

Order information

Width HP	Description	Model	Order no (Depth 167mm)	Order no (Depth 227mm)
5	Unshielded	Perforated	05616710	05622710
5	Unshielded	Without holes	05616700	05622700
6	Unshielded	Perforated	06616710	06622710
6	Unshielded	Without holes	06616700	06622700
7	Unshielded	Perforated	07616710	07622710
7	Unshielded	Without holes	07616700	07622700
8	Unshielded	Perforated	08616710	08622710
8	Unshielded	Without holes	08616700	08622700
10	Unshielded	Perforated	10616710	10622710
10	Unshielded	Without holes	10616700	10622700
12	Unshielded	Perforated	12616710	12622710
12	Unshielded	Without holes	12616700	12622700
14	Unshielded	Perforated	14616710	14622710
14	Unshielded	Without holes	14616700	14622700
21	Unshielded	Perforated	21616710	21622710
21	Unshielded	Without holes	21616700	21622700
28	Unshielded	Perforated	28616710	28622710
28	Unshielded	Without holes	28616700	28622700
42	Unshielded	Perforated	42616710	42622710
42	Unshielded	Without holes	42616700	42622700

Protective Series Subracks

Protective Subracks

- The external and internal structure and installation dimensions of the subracks conform to the standards of GB/T19520 and GB/IEC60297.
- Equipped with Plexiglas door and lock, both dustproof and can protect the safety of internal components.
- Protective subracks can be divided into: hanging type, base type, wall-mounted type, desktop four installation methods, customers can choose different installation methods according to demands.
- It meets the standard of EN60529/IEC529, and the protection level is IP66 in the form of ventilation.
- Cabinet box、front door、back door color, size can be customized.
- Utility model patent: CN201721518256.7

Delivery Comprises(kit)

Item	Name	Qty	Model
1	Front door	1	/
2	Cover plate (Top)	1	/
3	Front end cover plate	1	/
4	Cover plate gasket	2	/
5	Cover plate (Bottom)	1	/
6	Front panel	/	Choice
7	Front rails	2	/
8	Backplane	1	/
9	Rear rails	2	/
10	Inner side panel	2	/
11	Side panel gasket	4	/
12	Rear end cover plate	2	/
13	Left/right side panel	2	/
14	Adapter plate	1	/
15	Assembly components	1	/

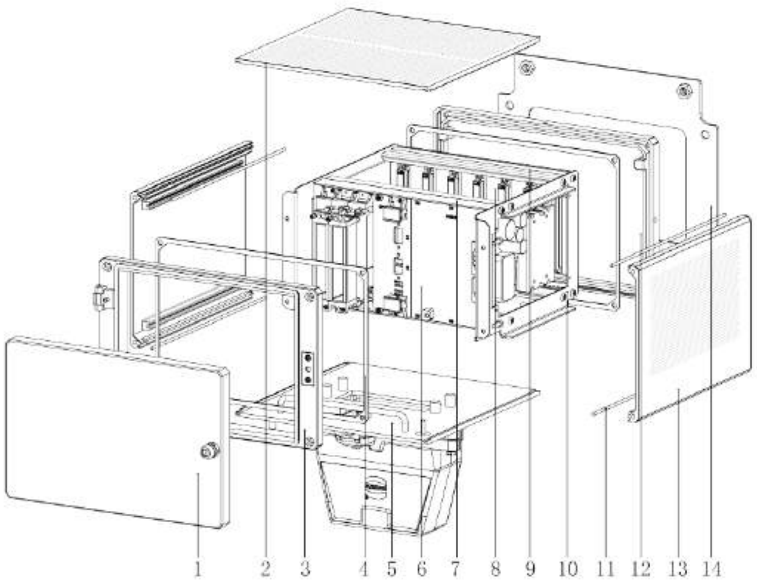

Protective Series Subracks

Protective Subracks

Order information

Height	Width	Depth	Order no
3U	42TE	160	01316042
3U	42TE	220	01322042
3U	42TE	285	01328542
3U	63TE	160	01316063
3U	63TE	220	01322063
3U	63TE	285	01328563
3U	84TE	160	01316084
3U	84TE	220	01322084
3U	84TE	285	01328584
4U	42TE	160	01416042
4U	42TE	220	01422042
4U	42TE	285	01428542
4U	63TE	160	01416063
4U	63TE	220	01422063
4U	63TE	285	01428563
4U	84TE	160	01416084
4U	84TE	220	01422084
4U	84TE	285	01428584

CASE Series Subracks

CASE Subrack

- Adopting the top and bottom cover insertion method, which makes the installation more concise and convenient.
- Can be applied to Compact PCI system platform construction, providing complete installation accessories support;
- IEC60603-2/DIN 41612 standard
- Custom colors available

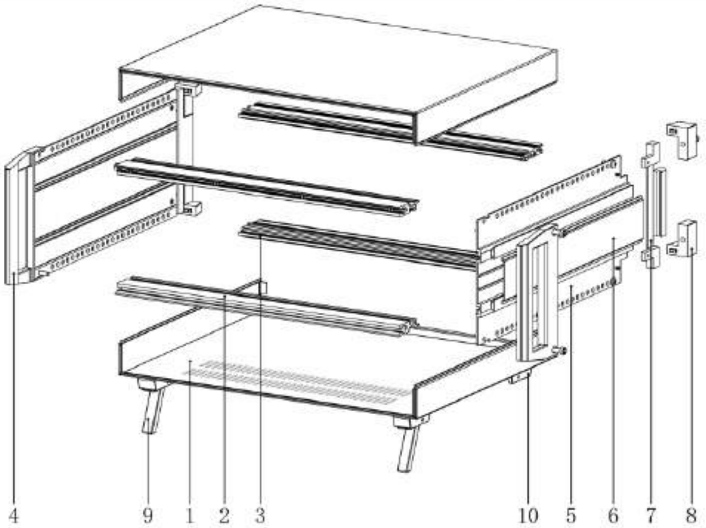

Delivery Comprises(kit)

Item	Name	Qty	Model
1	Cover plate	2	/
2	Front rails	2	/
3	Rear rails	2	/
4	Handle	2	/
5	Side panel	2	/
6	Side plate insert	2	/
7	Side panel rear connector	2	/
8	Rear printed board bracket	4	/

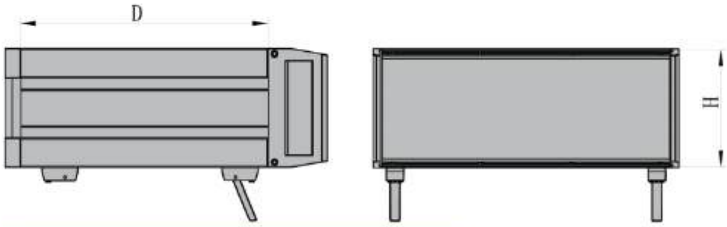

Order information

Height H	Width W	Depth D 300mm	Depth D 400mm
3U	42TE	00330042	00340042
3U	63TE	00330063	00340063
3U	84TE	00330084	00340084
4U	42TE	00430042	00440042
4U	63TE	00430063	00440063
4U	84TE	00430084	00440084
6U	42TE	00630042	00640042
6U	63TE	00630063	00640063
6U	84TE	00630084	00640084

Section of left and right side plate profiles

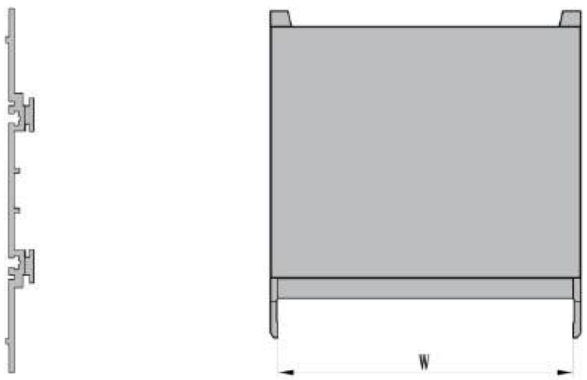

CASE Series Subracks

CASE-I Subrack

- Adopting the insertion method of upper and lower cover plates makes installation more concise and convenient
- Can be applied to the construction of the CompactPCI system platform, providing complete installation attachment support
- IEC60603-2/DIN 41612 standard
- Colors can be customized

Accessories (Optional models)

Item	Name	Qty	Describe
1	Cover plate (Top)	2	Spray molded RAL7001, aluminum
2	Cover plate (Bottom)	2	Spray molded RAL7001, aluminum
3	Front and rear frames	1	Spray molded RAL7075, aluminum
4	Side panel	1	Including 4 M4 inserts, anodized
5	Assembly screws	1	According to the actual hole position of the chassis, complete the screws

Order information

Height H	Width W	DepthD 331mm	DepthD 391mm
2U	42TE	01233142	01239142
2U	63TE	01233163	01239163
2U	84TE	01233184	01239184
3U	42TE	01333142	01339142
3U	63TE	01333163	01339163
3U	84TE	01333184	01339184
4U	42TE	01433142	01439142
4U	63TE	01433163	01439163
4U	84TE	01433184	01439184
5U	42TE	01533142	01539142
5U	63TE	01533163	01539163
5U	84TE	01533184	01539184
6U	42TE	01633142	01639142
6U	63TE	01633163	01639163
6U	84TE	01633184	01639184

CASE Series Subracks

CASE-I Subrack

- The CASE-II series plug-in box has two designs: foot and handle, suitable for different applications such as desktop and portable,and can be used to build various user-defined electronic devices, such as test equipment boxes, communication computer systems, etc
- Cast front frame design, sturdy and durable structure, streamlined edge design, making the chassis more beautiful
- Stretching aluminum profile side panel, outer groove design, beautiful and exquisite, also used for fixing portable handles The internal space is large, which can be used for traditional plug-in box design or customized with lining plates installed at the bottom according to customer needs for different application scenarios
- Easy installation, flexible usage, symmetrical front and rear design ensures product flexibility and interchangeability
- Multiple size options are available for installing 19 inch standard circuit board modules and irregularly shaped circuit board modules, providing excellent cost-effectiveness and making it an ideal choice for building instrument platforms

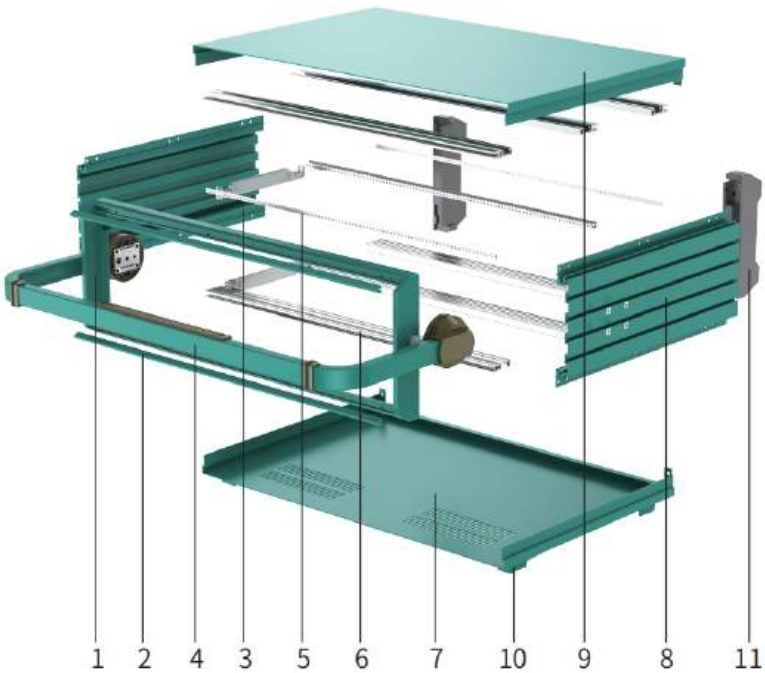

- The size on the right is the standard chassis size
- The size of the chassis can be customized according to customer needs
- Chassis color: The following colors are standard colors and can also be customized

Green Medium gray Royal blue White Grey (Cover plate)

Accessories (Optional models)

Item	Name	Qty	Model
1	Front frame of Subracks	1	/
2	Decorative strips	2	/
3	Guide rail	/	/
4	Subracks Handle	1	/
5	Threaded insert	6	/
6	Horizontal Rail	6	/
7	Cover plate (Bottom)	1	/
8	Side panel	2	/
9	Cover plate (Top)	1	/
10	Leg	4	/
11	Rear support foot	2	/
12	EMC gasket (Front rails)	/	Choice
13	Lnsulation strip	/	Choice
14	Screw installation package	1	/

Order information

Height H	Width W	Depth D	DepthD
3U	42TE	302	02330642
3U	63TE	302	02330663
3U	84TE	302	02330684
4U	42TE	302	02430642
4U	63TE	302	02430663
4U	84TE	302	02430684

A Series Subracks

Type A-I Subrack

- The subrack is used as a desktop case
- The subrack is equipped with VC legs to prevent the chassis from sliding after stacking
- Composite standard plug-in box can be installed inside the chassis
- When supplying: the box has been partially assembled
- Standard: 60297-3
- When the non ventilated form is selected, the protection grade is IP42

Material and finish

- Cover plate: 5052 aluminum plate, chromate passivation/painting
- Side plate: 6063 aluminum profile, painted
- Beam: 6063 aluminum profile, painted
- Installation angle rail: 6063 aluminum profile, chromate passivation/painting (Color can be customized)

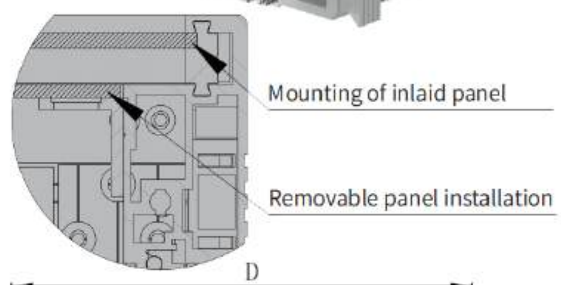

Accessories (Optional models)

Item	Name	Qty
1	Cover plate	2
2	Vertical bar	4
3	Cross member	4
4	Side member	4
5	Liner plate	2
6	Lnstallation of corner rails	2
7	Leg	8
8	Connecting bar	4
9	Corner connector	8
10	Mounting strip	4

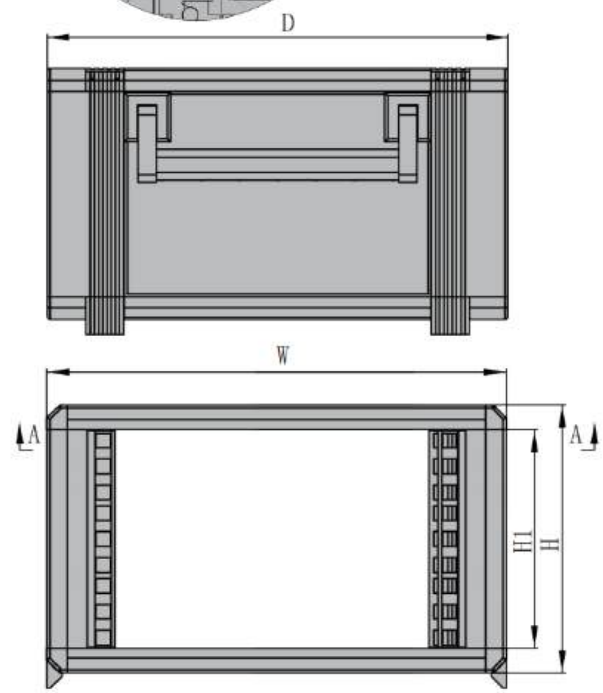

Order information

Height H	Width W	Height H(mm)	Height H1(mm)	Width W(mm)	Model	Depth D 300mm	Depth D 400mm	Depth D 500mm	Model	Depth D 300mm	Depth D 400mm	Depth D 500mm
2U	42TE	120	90	321	Perforated	01230042	01240042	01250042	Without holes	02230042	02240042	02250042
2U	84TE	120	90	534	Perforated	01230084	01240084	01250084	Without holes	02230084	02240084	02250084
3U	42TE	164	134	321	Perforated	01330042	01340042	01350042	Without holes	02330042	02340042	02350042
3U	84TE	164	134	534	Perforated	01330084	01340084	01350084	Without holes	02330084	02340084	02350084
4U	42TE	209	179	321	Perforated	01430042	01440042	01450042	Without holes	02430042	02440042	02450042
4U	84TE	209	179	534	Perforated	01430084	01440084	01450084	Without holes	02430084	02440084	02450084
6U	42TE	297	267	321	Perforated	01630042	01640042	01650042	Without holes	02630042	02640042	02650042
6U	84TE	297	267	534	Perforated	01630084	01640084	01650084	Without holes	02630084	02640084	02650084

A Series Subracks

Type A-II Subrack

- The subrack is used as a desktop case
- The subrack is equipped with VC legs to prevent the chassis from sliding after stacking
- Composite standard plug-in box can be installed inside the chassis
- When supplying: the box has been partially assembled
- Integral 5052 aluminum plate is selected as the side plate
- Standard: 60297-3
- When the non ventilated form is selected, the protection grade is IP42

Material and finish

- Cover plate: 5052 aluminum plate, chromate passivation/painting
- Side plate: 6063 aluminum profile, painted
- Beam: 6063 aluminum profile, painted
- Installation angle rail: 6063 aluminum profile, chromate passivation/painting (Color can be customized)

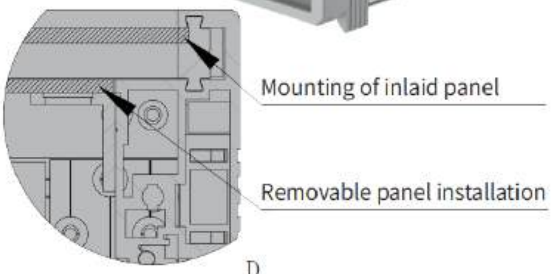

Accessories (Optional models)

Item	Name	Qty
1	Cover plate	2
2	Vertical bar	4
3	Cross member	4
4	Side member	4
5	Liner plate	2
6	Lnstallation of corner rails	2
7	Leg	8
8	Connecting bar	4
9	Corner connector	8
10	Mounting strip	4
11	Side panel	8/12/16
12	Horizontal Carrying Handle	2

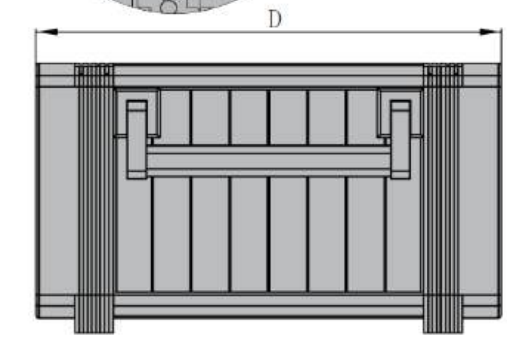

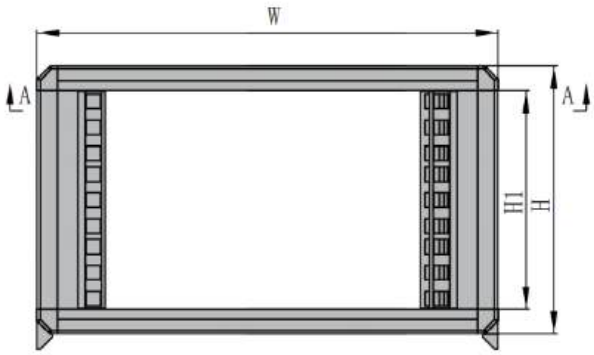

Order information

Height H	Width W	Height H(mm)	Height H1(mm)	Width W(mm)	Model	Depth D 300mm	Depth D 400mm	Depth D 500mm	Model	Depth D 300mm	Depth D 400mm	Depth D 500mm
2U	42TE	120	90	321	Perforated	03230042	03240042	03250042	Without holes	04230042	04240042	04250042
2U	84TE	120	90	534	Perforated	03230084	03240084	03250084	Without holes	04230084	04240084	04250084
3U	42TE	164	134	321	Perforated	03330042	03340042	03350042	Without holes	04330042	04340042	04350042
3U	84TE	164	134	534	Perforated	03330084	03340084	03350084	Without holes	04330084	04340084	04350084
4U	42TE	209	179	321	Perforated	03430042	03440042	03450042	Without holes	04430042	04440042	04450042
4U	84TE	209	179	534	Perforated	03430084	03440084	03450084	Without holes	04430084	04440084	04450084
6U	42TE	297	267	321	Perforated	03630042	03640042	03650042	Without holes	04630042	04640042	04650042
6U	84TE	297	267	534	Perforated	03630084	03640084	03650084	Without holes	04630084	04640084	04650084

A Series Subracks

Type A Subrack accessories

Horizontal Carrying Handle

- For easy and safe transportation
- Supplementary installation available
- Load resistance 30KG/pzzz
- Includes mounting fixings

Material and finish

- Side section: zinc die-cast, painted, color similar to RAL7035
- Middle part: Extruded aluminum profile, painted, color similar to RAL7035

Order information

Depthmm	Qty/UP	Order no
300	2	00100100
400	2	00100101
500	2	00100102

Rubber foot cover

- Can be supplemented by mounting on Type A subrack feet to avoid sliding of the case on a smooth plane

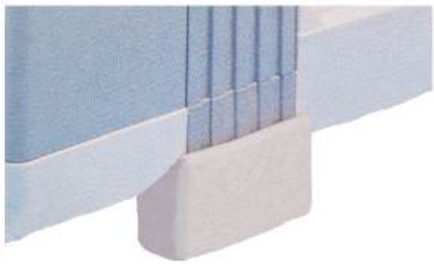

Material and finish

- Soft PVC, Shore hardness 60°.
- Color RAL7035

Order information

Qty/UP	Order no
12	00100103

Installation of corner rails

- Depth adjustable with 12.5 pitch for mounting rack mount devices or panels in Type A Subrack
- Mounting plates with threaded holes allow for different depths of mounting of component boxes/rack-mounted devices
- Includes mounting brackets

Material and finish

- Aluminum, anodized treatment

Order information

Height	Qty/UP	Order no
1U	4	00100104
2U	4	00100105
3U	4	00100106
4U	4	00100107
5U	4	00100108
6U	4	00100109

Type A Subrack accessories

M4 Threaded insert

- Used for mounting corner rails, sliding rails, mounting assemblies, etc, Can be pushed into the racking slot of the side panel
- Includes mounting fixings

Material and finish

- Extruded aluminum profile, chromate passivation

Order information

Height	Qty/UP	Order no
1U	8	00100110
2U	8	00100111
3U	8	00100112
4U	8	00100113
5U	8	00100114
6U	8	00100115

Grounding Connection Kit

- For meeting the requirements of electrical safety measures, suitable for all Type A subracks
- Configuration list: threaded strip, screw, connection lead in green/yellow, toothed ring, screw nut

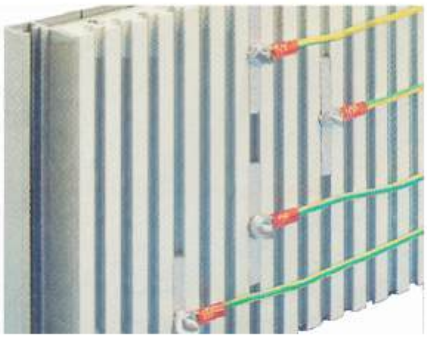

Order information

Qty/UP	Order no
4	00100116

Ventilation front panel

- Used for ventilation of cabinets and subracks

Material and finish

- Aluminum, anodized treatment

Order information

Width	Qty/UP	Qty/UP	Order no
482.6mm(19")	1U	3	00100117
482.6mm(19")	2U	3	00100118
482.6mm(19")	3U	3	00100119

A Series Subracks

Type A Subrack accessories

Cover plate, 482.6mm (19")

- For installation in electronic cabinets or subracks

Material and finish

- Aluminum, anodized treatment

Order information

Height	Qty/UP	Order no (269.2mm)	Order no (482.6mm)
1U	3	00100120	00100126
2U	3	00100121	00100127
3U	3	00100122	00100128
4U	3	00100123	00100129
5U	3	00100124	00100130
6U	3	00100125	00100131

Hinged cover plate, horizontally hinged

- For installation in electronic cabinets or subracks
- Includes mounting fixings

Material and finish

- Aluminum 3mm, anodized treatment

Order information

Height	Qty/UP	Width	Order no
3U	2	482.6mm(19")	00100132
6U	2	482.6mm(19")	00100133

Hinged cover plate, rotatable

- For installation in electronic cabinets or subracks
- Includes mounting fixings

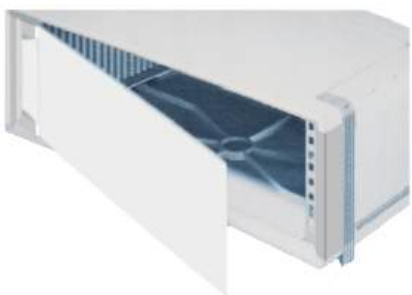

Material and finish

- Aluminum 3mm, anodized treatment

Order information

Height	Qty/UP	Width	Order no
3U	2	482.6mm(19")	00100134
6U	2	482.6mm(19")	00100135

Type A Subrack accessories

Hinged

- For cover plates
- Includes mounting fixings

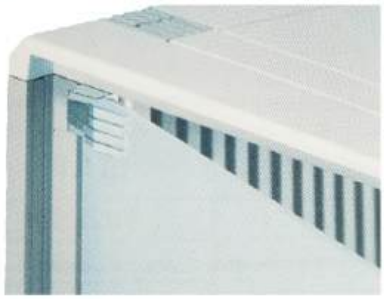

Material and finish

- Zinc die castings, nickel plated

Order information

Qty/UP	Order no
2	00100136

Drawer for 482.6 mm (19") with base plate

- For keyboards, operation manuals, etc. The bottom aperture plate facilitates IN-S circulation in the control cabinet and has a load capacity of 50KG. The 1U drawer can be installed by rotating 180° on the longitudinal axis so that it can be used as a bracket type countertop
- Includes sliding telescopic rails, drawer mounting kit

Material and finish

- Drawer material is aluminum, anodized
  Sliding telescopic rail: steel plate, galvanized

Order information

Height	Model	Order no
1U	with base plate	00100137
1U	Without base plate	00100138
3U	with base plate	00100139
3U	Without base plate	00100140

Set screw M6

- Set screws for electronic rack mount, 482.6mm (19") mounting device and shield
- Includes plastic spacer

Order information

Name	Qty/UP	Order no
Pan head Pozidrive c/sk screwM6	100	00100141

Insert screw nut

- Fixing screws for electronic rack mounting, 482.6mm (19") mounting devices and shields can be fixed to the fixing profile 482.6mm (19") with insertion screw nuts
- For profile plate thicknesses in the range of 0.8-2.0mm. In the small error range, insertion screw nuts with a profile plate thickness of 1.2-1.5 mm should be selected for mounting devices with or without contact points with the 482.6mm (19") profile/case

Order information

Model	Panel Thick	Qty/UP	Order no
With contact	0.8-2.0mm	50个	00100142
Without contact	0.8-2.0mm	50个	00100143
With contact	1.2-1.5mm	50个	00100144
Without contact	1.2-1.5mm	50个	00100145

Integrated side panel series subracks

Integrated side panel series subracks

- Integrated chassis with lightweight features
- The integrated design of the front flange and side panel, with the addition of reinforcement ribs, significantly improves the structural strength (see figure below)
- EMC electromagnetic compatibility structural design to meet the product's requirements for EMC electromagnetic compatibility
- Meet the vibration and impact testing standards IEC 61587-1, NE50155 BN411002, NF67012, NF F67002, Electromagnetic Compatibility VG95373, Part 5 Test Standards
- The integrated side panel series chassis is divided into integrated heavy-duty side panel chassis and integrated lightweight side panel chassis
- The integrated side panel can be used in conjunction with EK+, EG+, BEK, and BEG chassis crossbeams

Common Side panel

- Model Name: Side panel
- Example Name: Example 1
- Diagram type: Static displacement Displacement 1
- proportion of deformation: 44.3403

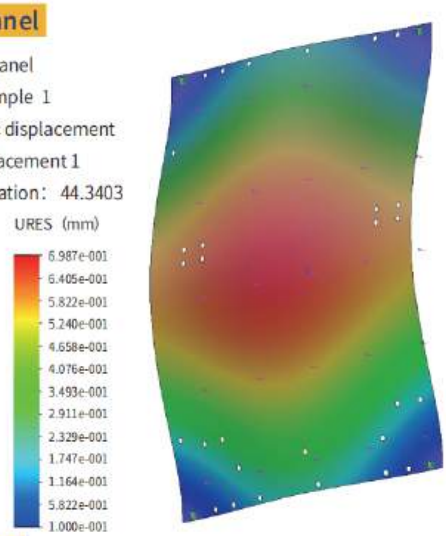

Rugged Subracks Side panel

- Model Name: Side panel
- Example Name: Example 2
- Diagram type: Static displacement Displacement 2
- proportion of deformation: 67.7489

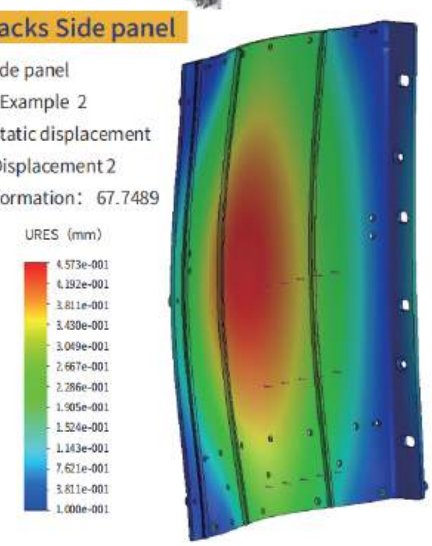

Order information

Height h	Width W	Depth Dmm	EK+ light Order no	EG+ light Order no	BEK light Order no	BEG light Order no	Depth Dmm	EK+ heavy Order no	EG+ heavy Order no	BEK heavy Order no	BEG heavy Order no
7U (6+1)	42TE	200	03760042	13760042	23760042	33760042	220	03762042	13762042	23762042	33762042
7U (6+1)	42TE	260	03766042	13766042	23766042	33766042	280	03768042	13768042	23768042	33768042
7U (6+1)	63TE	200	03760063	13760063	23760063	33760063	220	03762063	13762063	23762063	33762063
7U (6+1)	63TE	260	03766063	13766063	23766063	33766063	280	03768063	13768063	23768063	33768063
7U (6+1)	84TE	200	03760084	13760084	23760084	33760084	220	03762084	13762084	23762084	33762084
7U (6+1)	84TE	260	03766084	13766084	23766084	33766084	280	03768084	13768084	23768084	33768084
7U (6+½+½)	42TE	200	03770042	13770042	23770042	33770042	220	03772042	13772042	23772042	33772042
7U (6+½+½)	42TE	260	03776042	13776042	23776042	33776042	280	03778042	13778042	23778042	33778042
7U (6+½+½)	63TE	200	03770063	13770063	23770063	33770063	220	03772063	13772063	23772063	33772063
7U (6+½+½)	63TE	260	03776063	13776063	23776063	33776063	280	03778063	13778063	23778063	33778063
7U (6+½+½)	84TE	200	03770084	13770084	23770084	33770084	220	03772084	13772084	23772084	33772084
7U (6+½+½)	84TE	260	03776084	13776084	23776084	33776084	280	03778084	13778084	23778084	33778084

Integrated side panel series subracks

Section of left and right side plate profiles

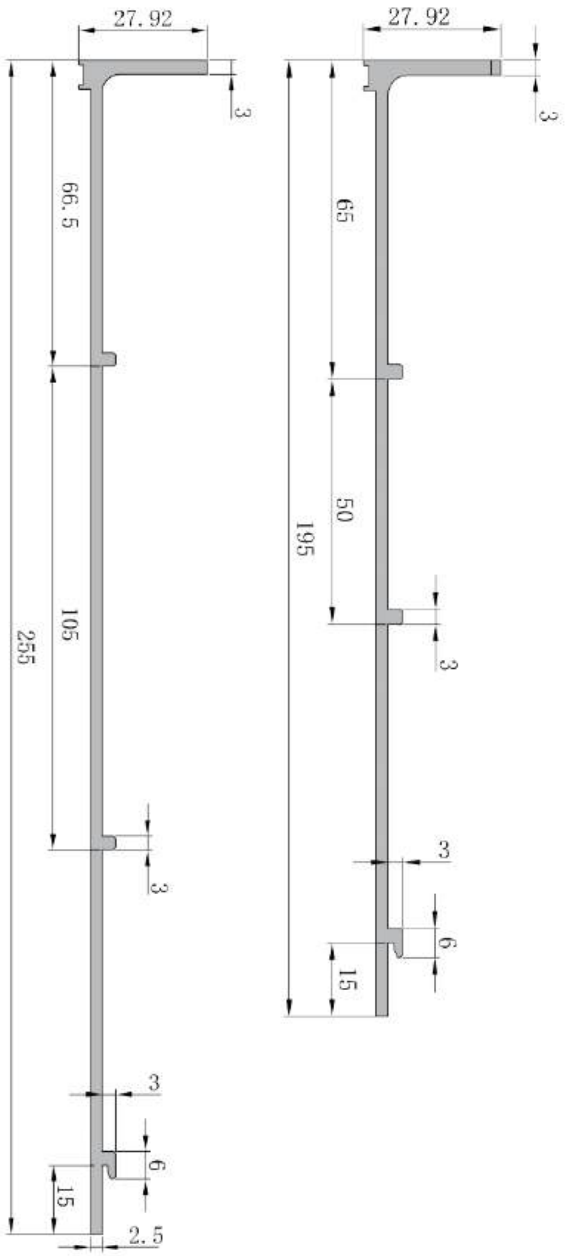

Intelligent Assembly Workstation Features

- Material Picking Tips
- Standard parts gripping tray
- Electric torque wrenches, electric screwdrivers hanging and placing sensors
- Out of material alarm
- Installation sequence prompt light
- After all processes are assembled with video photo data analysis and qualified, the light will be prompted, and the finished product will be swept off the line and transported to the next workstation for the next process
- Product assembly process video tracking automatic feedback performance, automatic archiving to facilitate product source traceability, equipment program left with MES communication protocol port to facilitate enterprise scheduling and performance assessment

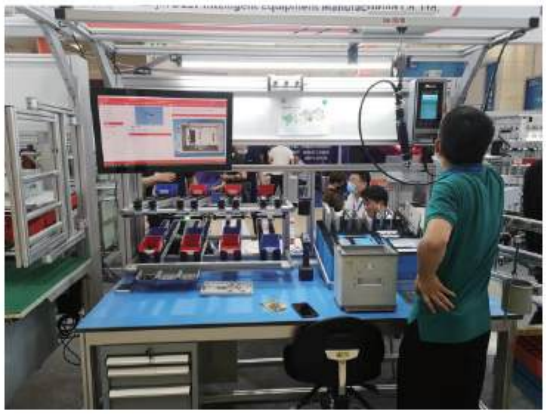

Application of intelligent torsion system

- Storage of tightening torque information for accurate and high-quality torque and angle control for later traceability

Integrated side panel series subracks

Integrated side panel series subracks

- Integrated chassis with lightweight features
- Integrated design of front flange and side panel, with added reinforcement ribs, significantly improves structural strength
- EMC electromagnetic compatibility structural design to meet the product's requirements for EMC electromagnetic compatibility
- Meets vibration and impact testing standards IEC 61587-1, NE50155, BN411002, NF67012, NF F67002, electromagnetic compatibility VG95373, Part 5 testing standards
- Applicable to card depths of 160 mm and 220 mm (depending on chassis depth)
- Support the installation of cooling fans (3U+1U)
- The integrated side panel series chassis is divided into integrated heavy-duty side panel chassis and integrated lightweight side panel chassis
- The integrated side panel can be used in conjunction with EK+, EG+, BEK, and BEG chassis crossbeams

Order information

Height h	Width W	Depth Dmm	EK+ light Order no	EG+ light Order no	BEK light Order no	BEG light Order no	Depth Dmm	EK+ heavy Order no	EG+ heavy Order no	BEK heavy Order no	BEG heavy Order no
3U	42TE	200	03300042	13300042	23300042	33300042	220	03302042	13302042	23302042	33302042
3U	42TE	260	03306042	13306042	23306042	33306042	280	03308042	13308042	23308042	33308042
3U	63TE	200	03300063	13300063	23300063	33300063	220	03302063	13302063	23302063	33302063
3U	63TE	260	03306063	13306063	23306063	33306063	280	03308063	13308063	23308063	33308063
3U	84TE	200	03300084	13300084	23300084	33300084	220	03302084	13302084	23302084	33302084
3U	84TE	260	03306084	13306084	23306084	33306084	280	03308084	13308084	23308084	33308084
4U(3+1)	42TE	200	03410042	13410042	23410042	33410042	220	03412042	13412042	23412042	33412042
4U(3+1)	42TE	260	03416042	13416042	23416042	33416042	280	03418042	13418042	23418042	33418042
4U(3+1)	63TE	200	03410063	13410063	23410063	33410063	220	03412063	13412063	23412063	33412063
4U(3+1)	63TE	260	03416063	13416063	23416063	33416063	280	03418063	13418063	23418063	33418063
4U(3+1)	84TE	200	03410084	13410084	23410084	33410084	220	03412084	13412084	23412084	33412084
4U(3+1)	84TE	260	03416084	13416084	23416084	33416084	280	03418084	13418084	23418084	33418084
4U(3+½+½)	42TE	200	03420042	13420042	23420042	33420042	220	03422042	13422042	23422042	33422042
4U(3+½+½)	42TE	260	03426042	13426042	23426042	33426042	280	03428042	13428042	23428042	33428042
4U(3+½+½)	63TE	200	03420063	13420063	23420063	33420063	220	03422063	13422063	23422063	33422063
4U(3+½+½)	63TE	260	03426063	13426063	23426063	33426063	280	03428063	13428063	23428063	33428063
4U(3+½+½)	84TE	200	03420084	13420084	23420084	33420084	220	03422084	13422084	23422084	33422084
4U(3+½+½)	84TE	260	03426084	13426084	23426084	33426084	280	03428084	13428084	23428084	33428084

Integrated side panel series subracks

瑞德科诺 RDEKON

Integrated side panel series subracks

- Integrated chassis with lightweight features
- Integrated design of front flange and side panel, with added reinforcement ribs, significantly improves structural strength
- EMC electromagnetic compatibility structural design to meet the product's requirements for EMC electromagnetic compatibility
- Meets vibration and impact testing standards IEC 61587-1, NE50155, BN411002, NF67012, NF F67002, electromagnetic compatibility VG95373, Part 5 testing standards

Left and right side plate profiles

Order information

Height h	Width W	Depth Dmm	EK+ light Order no	EG+ light Order no	BEK light Order no	BEG light Order no	Depth Dmm	EK+ heavy Order no	EG+ heavy Order no	BEK heavy Order no	BEG heavy Order no
6U	42TE	200	03600042	13600042	23600042	33600042	220	03602042	13602042	23602042	33602042
6U	42TE	260	03606042	13606042	23606042	33606042	280	03608042	13608042	23608042	33608042
6U	63TE	200	03600063	13600063	23600063	33600063	220	03602063	13602063	23602063	33602063
6U	63TE	260	03606063	13606063	23606063	33606063	280	03608063	13608063	23608063	33608063
6U	84TE	200	03600084	13600084	23600084	33600084	220	03602084	13602084	23602084	33602084
6U	84TE	260	03606084	13606084	23606084	33606084	280	03608084	13608084	23608084	33608084
6U(3+3)	42TE	200	03630042	13630042	23630042	33630042	220	03632042	13632042	23632042	33632042
6U(3+3)	42TE	260	03636042	13636042	23636042	33636042	280	03638042	13638042	23638042	33638042
6U(3+3)	63TE	200	03630063	13630063	23630063	33630063	220	03632063	13632063	23632063	33632063
6U(3+3)	63TE	260	03636063	13636063	23636063	33636063	280	03638063	13638063	23638063	33638063
6U(3+3)	84TE	200	03630084	13630084	23630084	33630084	220	03632084	13632084	23632084	33632084
6U(3+3)	84TE	260	03636084	13636084	23636084	33636084	280	03638084	13638084	23638084	33638084

IN-S Subracks

IN-S Subracks

- Desktop cabinet pre configured according to IEC 60297-3-101 standard, applicable to European board and backplane with insulating strips
- EMC shielding components can be added
- This version has a covering strip and no visible screws
- Subracks with integrated ventilation fan (2 x 1/2 U)
- Symmetrical design, same front and rear/front flange (including Handle integrated profile)
- Honeycomb mesh ventilation/non ventilation of top cover and bottom plate
- Applicable to 160 mm, 220 mm, 280 mm, and 340 mm board depth (depending on subracks depth)
- Conform to DIN EN 62368-1

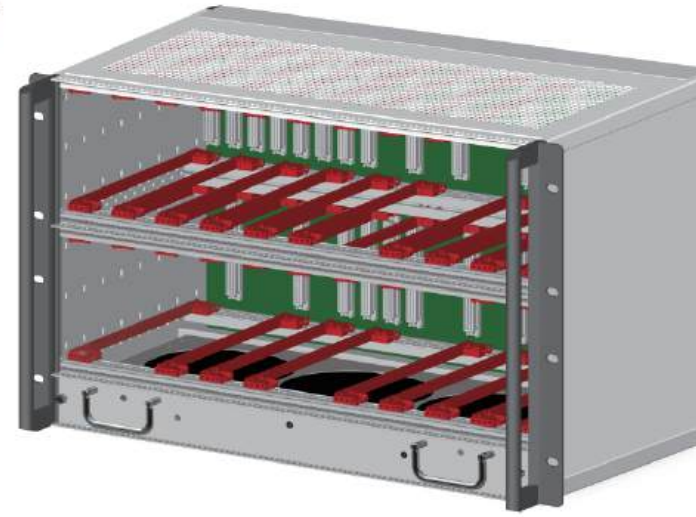

Delivery Comprises(kit)

Item	Name	Qty	Model
1	Side panel	2	/
2	Side panel baffle	2	/
3	Front bracket	2	/
4	Rear bracket	2	/
5	Front rails	5	/
6	Rear rails	6	/
7	Cover plate	2	/
8	Insulation strip	6	/
9	Side panel baffle circlip	8	/
10	Threaded insert	11	/
11	Rear fixing strip	2	/
12	Fan insert	1	/
13	EMC gasket (Front rails)	5	/
14	EMC textile gasket	2	/
15	EMC gasket (Cover plate)	4	/

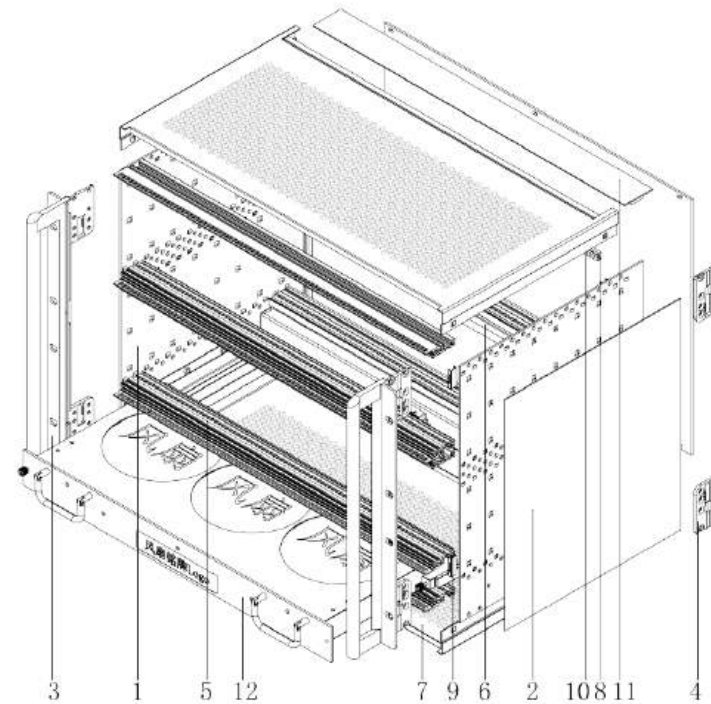

Order information

Height h	Width W	Depth D	Order no
7U	42TE	245mm	04724542
7U	42TE	285mm	04728542
7U	42TE	345mm	04734542
7U	63TE	245mm	04724563
7U	63TE	285mm	04728563
7U	63TE	345mm	04734563
7U	84TE	245mm	04724584
7U	84TE	285mm	04728584
7U	84TE	345mm	04734584

IN-S Subracks

IN-S Subracks

- Desktop cabinet pre configured according to IEC 60297-3-101 standard, applicable to European board and backplane with insulating strips
- EMC shielding components can be added
- This version has a covering strip and no visible screws
- Subracks with integrated ventilation fan (2 x 1/2 U)
- Symmetrical design, same front and rear/front flange (including Handle integrated profile)
- Honeycomb mesh ventilation/non ventilation of top cover and bottom plate
- Applicable to 160 mm, 220 mm, 280 mm, and 340 mm board depth (depending on subracks depth)
- Conform to DIN EN 62368-1

Delivery Comprises(kit)

Item	Name	Qty	Model
1	Side panel	2	/
2	Side panel baffle	2	/
3	Front bracket	2	/
4	Rear bracket	2	/
5	Front rails	4	/
6	Rear rails	6	/
7	Cover plate	2	/
8	Insulation strip	6	/
9	Side panel baffle circlip	8	/
10	Threaded insert	10	/
11	Rear fixing strip	2	/
12	EMC gasket (Front rails)	4	/
13	EMC textile gasket	2	/
14	EMC gasket (Cover plate)	4	/

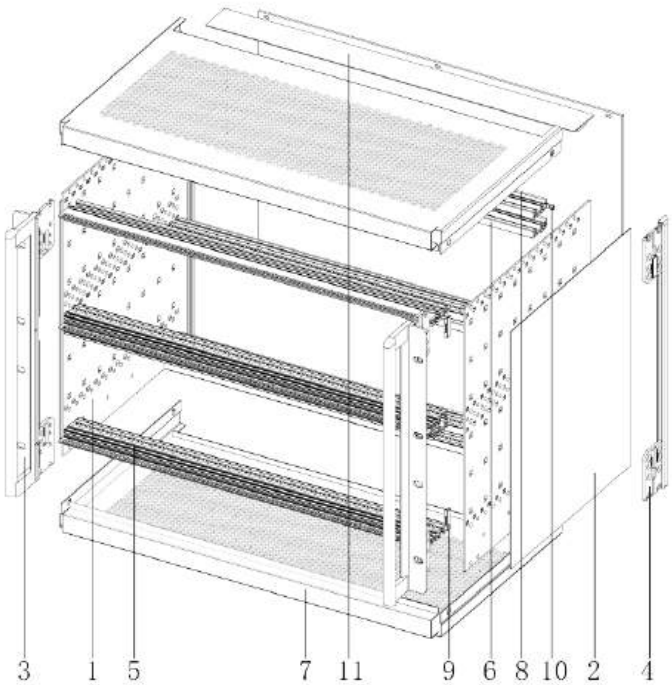

Order information

Height h	Width W	Depth D	Order no
7U	42TE	245mm	05724542
7U	42TE	285mm	05728542
7U	42TE	345mm	05734542
7U	63TE	245mm	05724563
7U	63TE	285mm	05728563
7U	63TE	345mm	05734563
7U	84TE	245mm	05724584
7U	84TE	285mm	05728584
7U	84TE	345mm	05734584

Handle

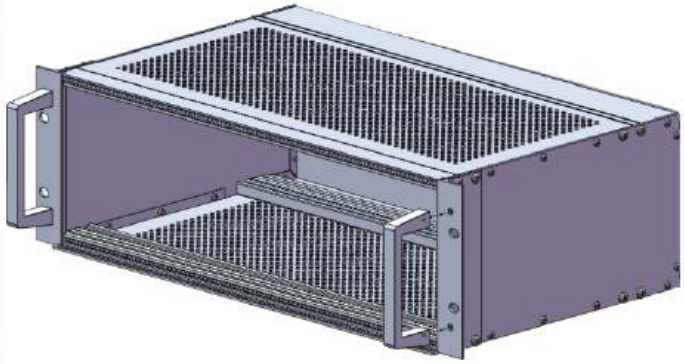

Square handle

- Handle load capacity 30KG
- Installed on the front flange or side panel of the subrack

Delivery includes

Item	Name	Description
1	Square handle	Front Handle, Aluminum, anodized treatment

Order information

W mm	E mm	Anodized treatment Order no	Anodized treatment Black Order no
69	55	1000009	1030042
102	88	1000010	1030043
132	120	1030030	1030044
146.4	133.5	1000011	1030045
194	180	1000012	1030046
249	235	1000013	1030047

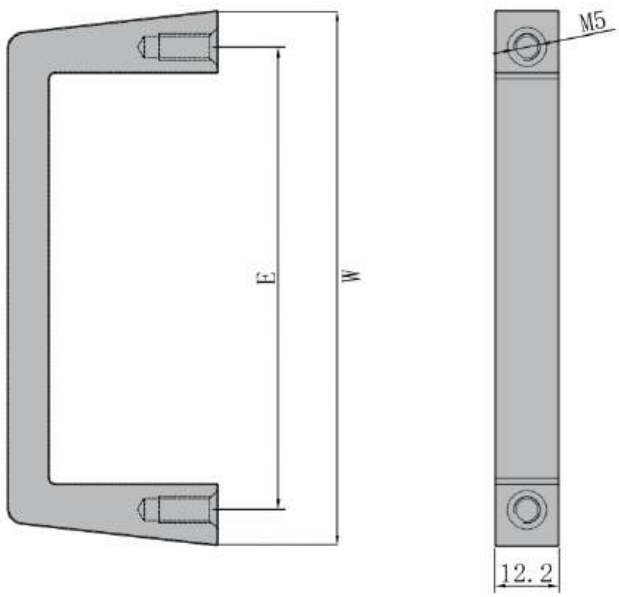

Handle

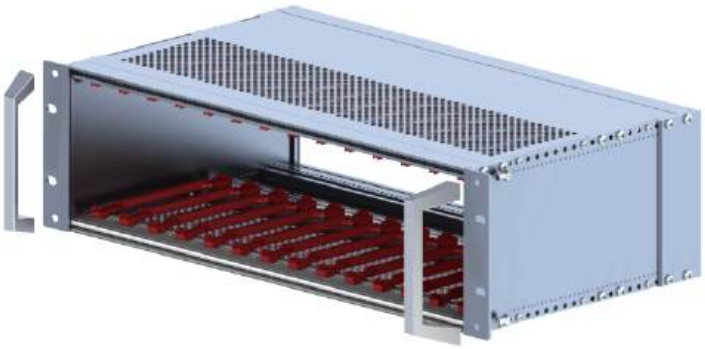

Slant handle

- Handle load capacity 30KG
- Installed on the front flange or side panel of the subrack

Delivery includes

Item	Name	Description
1	Slant handle	Front Handle, Aluminum, anodized treatment

Order information

W mm	E mm	Anodized treatment Order no	Anodized treatment Black Order no
69	55	1030048	1030054
102	88	1000007	1030055
132	120	1030050	1030056
146.4	133.5	1030051	1030057
194	180	1030052	1030058
249	235	1030064	1030059

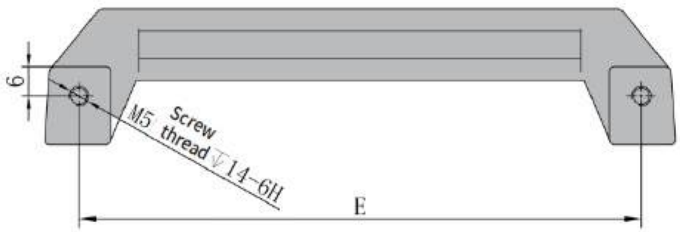

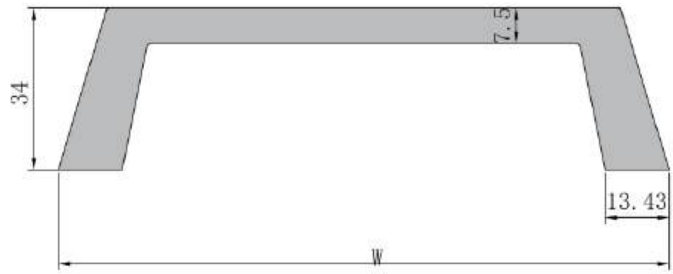

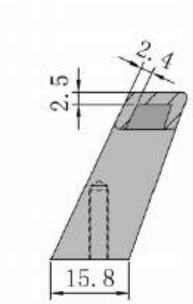

Subracks Accessories

Hinged panels

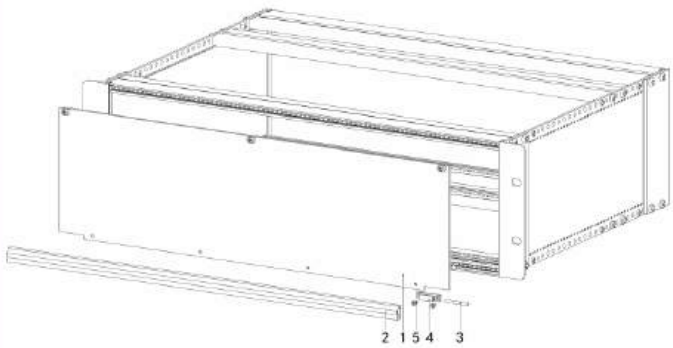

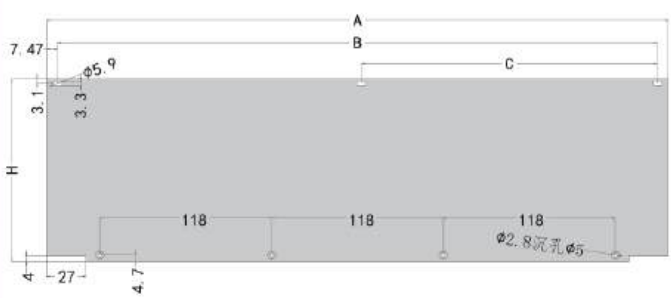

Hinged panels

- Hinges are mounted on the bottom of the panel
- Can be applied to Subrack cases and instrument cases with an opening angle of 105 degrees
- The available width of the subrack is not affected while the hinge is installed
- Fixing method: Hinged panels are fixed to the cross member of the subrack

Delivery Comprises(kit)

Item	Qty	Order no	Description
1	1	/	Front panel,bottom-hinged,Al,2.5mm anodised,cut edges untreated
2	1	10290002	Hinge,Zn die-cast,nickel-plated
3	2	1023004	Hinge Nail penetrate
4	2	10290011	Hinge Seat, Aluminum casting
5	3	1004023	Panel fixing screws M2.5x12, steel

Panel Order information

H Height	W Width	Amm	Bmm	Cmm	Hmm	Order no
3U	28TE	141.9	127	-	-	00232810
3U	42TE	213	198.1	101.6	128.4	00234210
3U	63TE	319.7	304.8	157.5	128.4	00236310
3U	84TE	426.4	411.5	203.2	128.4	00238410
4U	42TE	213	198.1	101.6	172.9	00244210
4U	63TE	319.7	304.8	157.5	172.9	00246310
4U	84TE	426.4	411.5	203.2	172.9	00248410
6U	63TE	213	198.1	101.6	261.8	00264210
6U	63TE	319.7	304.8	157.5	261.8	00266310
6U	84TE	426.4	411.5	203.2	261.8	00268410

Hinged panels

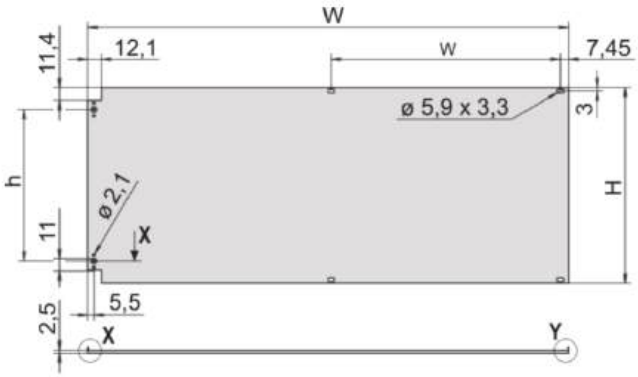

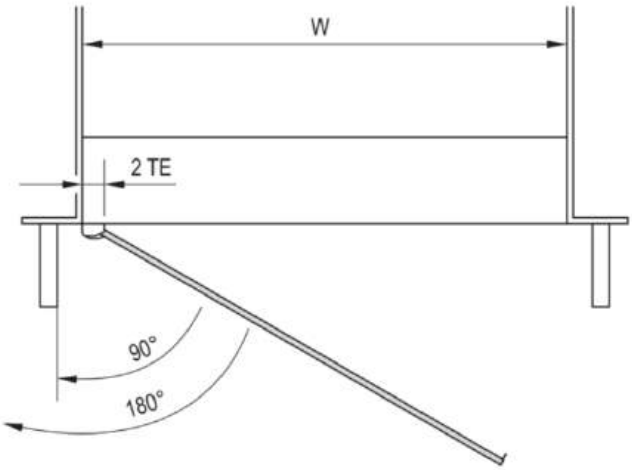

Hinged panels

- Can be applied to Subrack cases and instrument cases, opening angle 105 degrees
- Fixing method: Hinged panel fixed to the cross member
- Hinges can be installed on the left or right side of the case

Delivery Comprises(kit)

Item	Qty	Order no	Description
1	1	/	Front panel,bottom-hinged,Al,2.5mm anodised,cut edges untreated
2	1	10290008	On hinge, aluminum casting,nickel plated surface
2a	1	10290009	Under hinge, aluminum casting, nickel plated surface
2b	2	10290010	Hinge A, aluminum casting, nickel plated surface
3	1	1004023	Panel fixing screws M2.5x12, Nickel plated steel

Panel Order information

Height	W mm	w mm	H mm	h mm	Order no
3U	426.4	203.2	128.4	89.9	00238420
6U	426.4	203.2	261.8	223.2	00268420

Subracks Accessories

Type U Panel

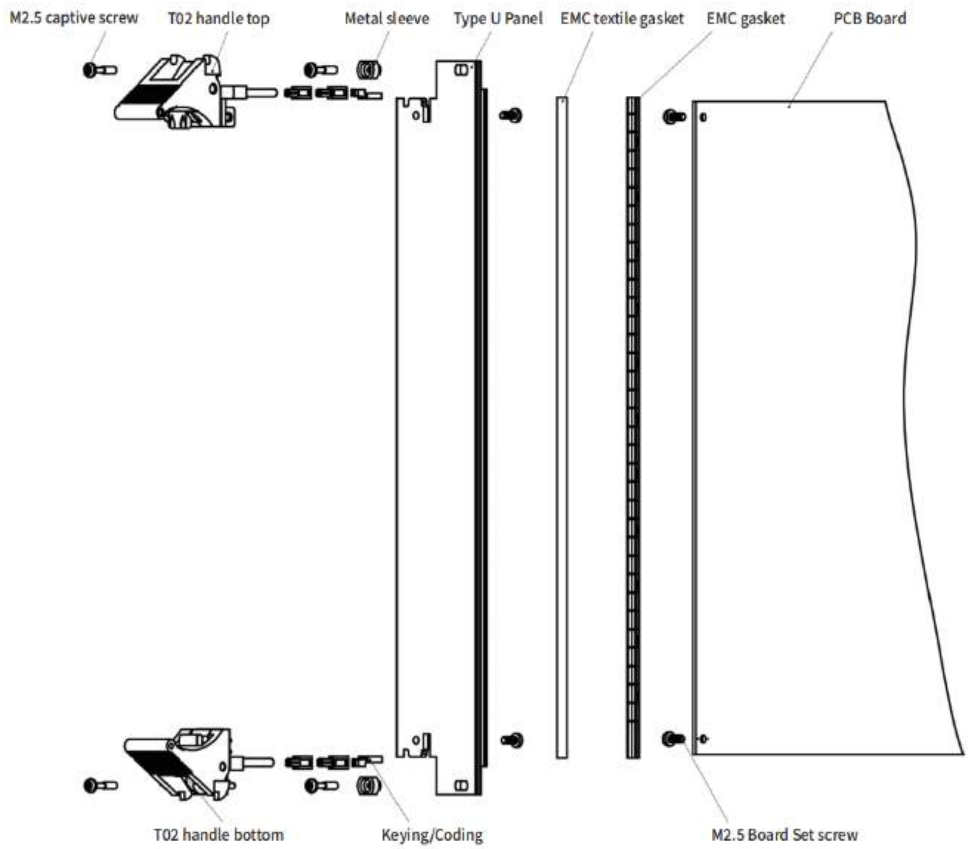

EMC textile gasket Schematic

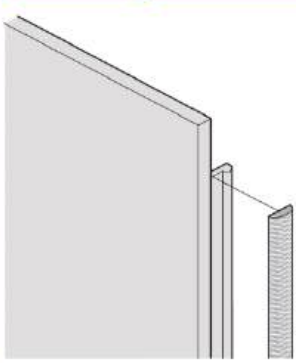

Type U Panel Profile

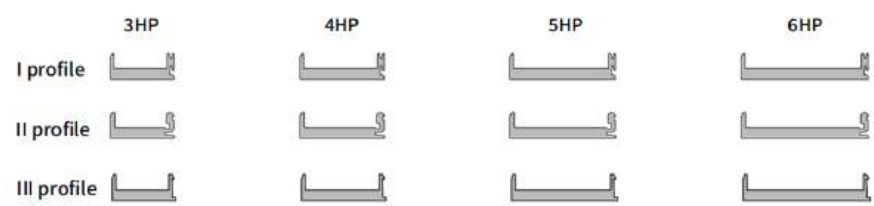

Delivery includes

Item	Name	Qty	Description
10	EMC textile gasket	1	Conductive cloth shielding strip

EMC textile gasket Order no

Height U	Width mm	Order no
3	97	1008037
6	232	1008038

EMC Gasket schematic section

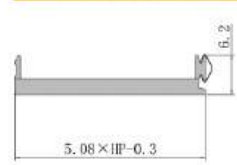

I Profile panel install EMC gasket-type I

II Profile panel install EMC gasket-type II

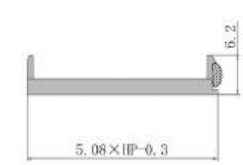

III Profile panel install EMC textile gasket

Type U Panel

Flat front panel blind panel

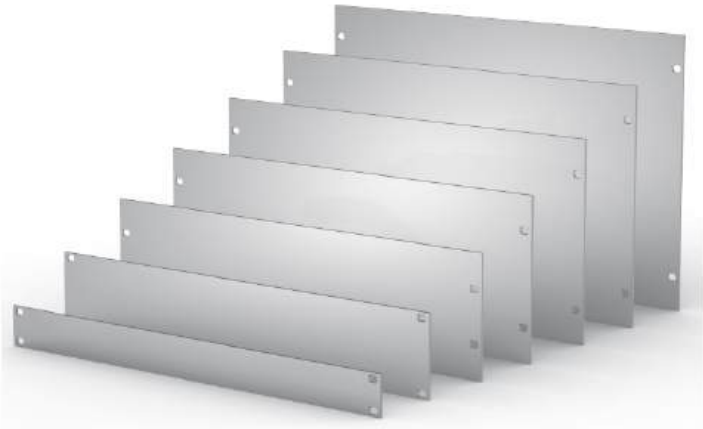

- Aluminum front panel blind plate
- Used in conjunction with M6 screws, it can be installed in front of the cabinet and used as the front panel of the cabinet

Delivery Comprises

Name	Qty	Model	Description
Flat blind plate	1	/	Profile panel, suitable for the front panel of the cabinet chassis
Screw component	4	/	Lnstall panel accessories

Cut-SIze

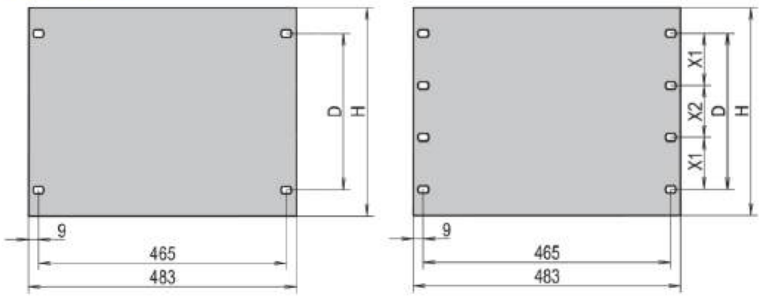

Order information

Height U	H mm	D mm	X1 mm	X2 mm	Mounting Hole Qty	Thickness3mm RAL7021 Order no	Thickness3mm RAL7035 Order no	Thickness3mm Anodization Order no	Thickness4mm Anodization Order no
1U	43.6	31.7	-	-	4	01013021	01013035	01013000	01014000
2U	88.1	76.2	-	-	4	01023021	01023035	01023000	01024000
3U	132.5	57.1	-	-	4	01033021	01033035	01033000	01034000
4U	177.0	101.6	-	-	4	01043021	01043035	01043000	01044000
5U	221.4	146.0	-	-	4	01053021	01053035	01053000	01054000
6U	265.9	190.4	-	-	4	01063021	01063035	01063000	01064000
7U	310.3	234.9	-	-	4	-	-	01073000	01074000
7U	310.3	234.9	88.9	57.1	8	01073021	01073035	-	-
8U	354.8	279.4	-	-	4	-	-	01083000	01084000
8U	354.8	279.4	101.6	76.2	8	01083021	01083035	-	-
9U	399.2	323.8	101.6	120.6	8	01093021	01093035	01093000	01094000
10U	443.7	368.3	101.6	165.1	8	01103021	01103035	01103000	01104000

Subracks Accessories

2.5" hard drive cage assembly

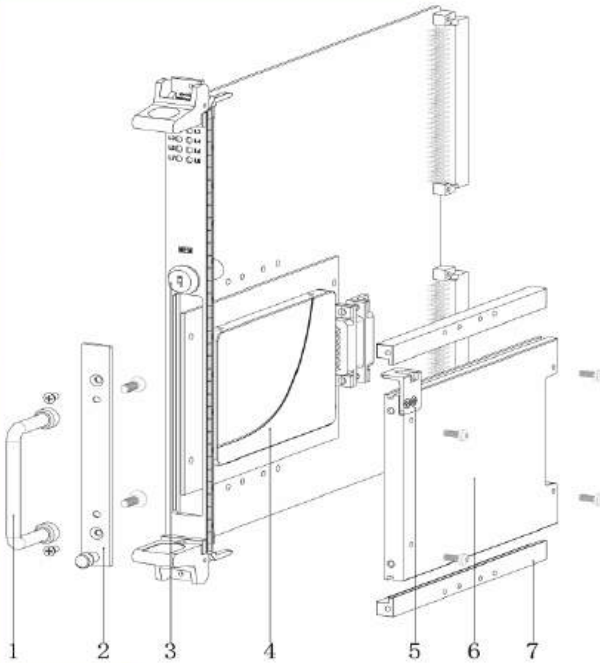

- For hard drive protection against physical damage and mechanical damage
- Suitable for 4U and 6U and above size PCB card mount 2.5" solid state drives
- With lock for easy hard drive removal and installation

Cut-SIze

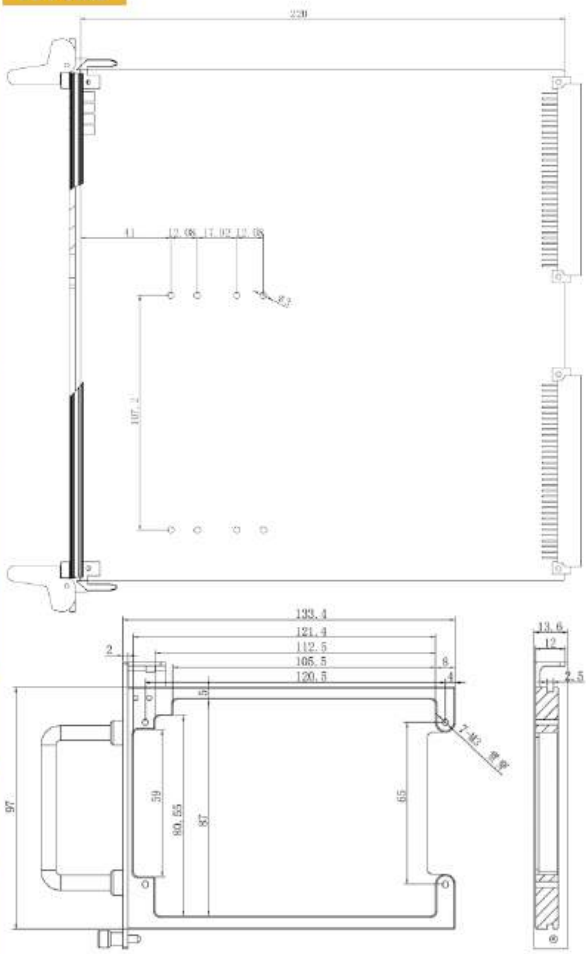

Delivery Comprises(kit)

Item	Name	Qty	Model
1	Handle	1	/
2	Front panel	1	Stainless steel, Wire drawing process
3	Hard disk lock	1	/
4	2.5 inch hard disk	1	/
5	Locking element	1	/
6	Hard drive	1	/
7	Hard drive Guide rail	2	/
8	Assembly components	1	Pan head Screw M2.5

Order no

Name	Order no
2.5" hard drive cage assembly	02622021

瑞德科诺
RDEKON

Standards/certifications

Structural dimensions: GB/T 19520、IEC60297、TB/T 1002-2006、GB/T 25119-2021
Vibration and impact testing: EN61373

Customized service

Working voltage: DC 24V/12V ± 10%
Input power:< 20W
Fan parameters: rated speed 2500/MIN
Maximum air flow rate 3.15m3/MIN
Maximum air pressure 5.19mm-H2O
Isolation impedance 10M Ω MIN at 500VDC (shell positive terminal)
Insulation strength 5mA MAX at 500VAC 60Hz 1min (shell positive end)
The starting temperature setting range is 25 °C -40 °C, with three adjustable settings and a forced start mode.

Function description of temperature controlled fan

1. Used for ventilation of electronic control cabinets, with a high current D-sub connector plug-in form for the rear port;
2. Built in three axial fans of the same specifications, temperature controlled start, energy-saving and noise reduction, and extended service life;
3. It can simultaneously detect the temperature of three different areas inside the cabinet, and select the installation location of the corresponding sensor based on the heating condition inside the cabinet;
When the temperature at the sensor in a certain area reaches 30 °C (default setting, adjustable, error not greater than 2 °C), the corresponding fan starts. When the temperature in that area drops to 28 °C (error)
The difference is not greater than 2 °C, and the fan is turned off. Three way fan independent control. Temperature control adopts hysteresis control to prevent frequent start and stop of the fan.
5. The front panel is equipped with two indicator lights. A green light indicates normal operation, while a red light indicates abnormal operation of the fan or sensor. When the following faults occur, the red light will turn on and the green light will turn off:
1) Any fan is stuck or not functioning properly. Each fan has its own protection circuit, which does not affect each other, limiting possible faults to the minimum range and improving the overall system
Reliability of the system.
2) Any sensor experiences poor contact, disconnection, short circuit, or resistance value exceeding the normal range. At this time, in addition to the red light being on, the fan at the corresponding position will also be forcibly started.
3) After the fan is stuck, it will try to start every 5.5 seconds. At this time, the green light will be on for about one second. If the start is successful, the green light will remain on. If the start is unsuccessful, the red light will be on.
6. The starting temperature setting value can be set in three levels, with a default factory value of 30 °C. Open the upper cover of the fan component casing, and there is a rotary dip switch on the temperature control main control board module inside, corresponding to
The gear settings are as follows:
★ Gear 0: Force start all fans, temperature control does not work at this time.
★ Start the fan at 1:25 °C gear.
Start the fan at 2:30 °C gear.
★ Gear 3: Start the fan at 40 °C.
7. The rotary dip switch has a protection level of IP67 and excellent moisture resistance. The temperature control main control board has complete overvoltage and overcurrent protection, and has good EMC performance.

Fan disk module

Fan disk component

- The chassis adopts a 1U structure, including front panel (profile 6063), disk bottom (covered with aluminum zinc plate 5052), disk cover (covered with aluminum zinc plate 5052) and other parts connected together by screws
- Dimensions: Width 426mm, depth compatible with 160/220 depth board, height 43.6mm
- Heating can cause equipment to stop running due to malfunctions, and before that, it will shorten the service life of high-performance electronic components and weaken their functionality
- High heat dissipation and compact space are the root causes, therefore, heat dissipation is the key to improving product lifespan and enhancing work safety and reliability

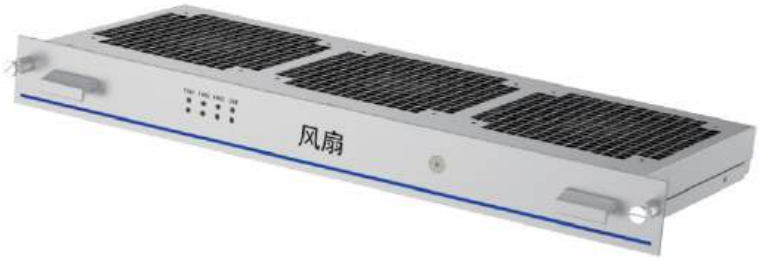

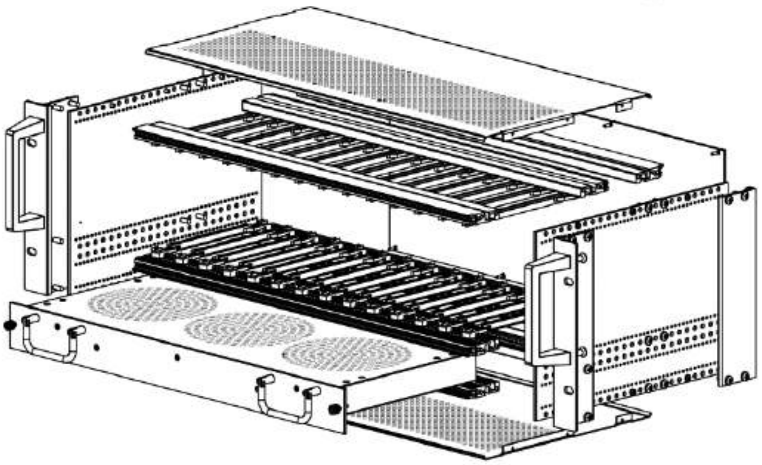

Delivery Comprises(kit)

Project	Name	Quantity per unit
1	Fan disk bottom	1
2	Fan disk cover	1
3	Fan board box cover	1
4	Bottom of fan board box	1
5	Guiding pin	2
6	Fan disk handle	2
7	Fan panel	1
8	Electrical components	1
9	Installation package	1

Fan disk module

Long cable fan disc

- Range options: 20... 40 °C and 30... 50 °C
- Reduce the noise generated by temperature related airflow
- External sensor, maximum speed set to default fault state
- Use LED and dry contacts for functional control
- Contact protection in accordance with DIN EN ISO 13857 standard
- The fan unit is suitable for installation in a 1 U space within the cabinet

Dimension

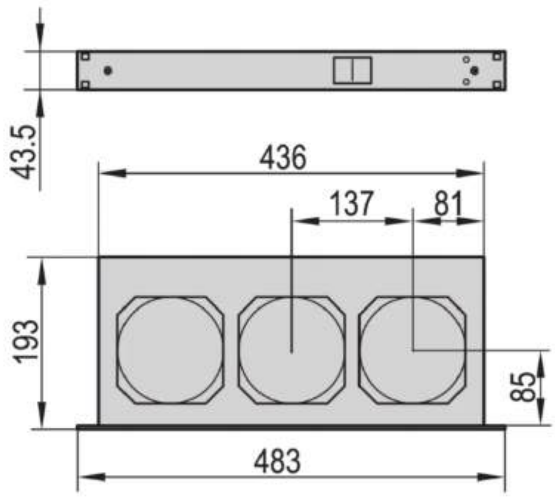

Delivery Comprises(kit)

Project	Name	Quantity per unit
1	19 "circulating fan, 1 U; cover/bottom plate, carbon steel, 1 mm, surface coated with aluminum zinc, front panel with ventilation mesh holes, 1 U, aluminum, 3 mm, anodized, with switch	1
2	DC FAN	3
3	Connecting cable, length 2.5 meters, open type	1
4	Speed control temperature sensor, NTC resistor, cable length of 1.5 meters	1

Fan disk module

瑞德科诺 RDEKON

Temperature controlled fan disc

- Can be adjusted according to the specifications of the plug-in box
- Contact protection in accordance with DIN EN ISO 13857 standard
- Front mounted illuminated power switch on communication equipment with additional rear power outlet;
- Mechanical stress relief device suitable for power input and power output cables.
- Please order the power cord separately
- Can provide a wide range of input voltages upon request (86... 264 VAC)

Dimension

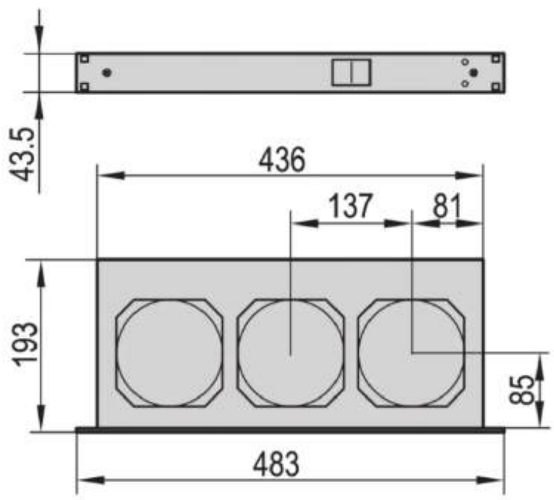

Delivery Comprises(kit)

Project	Name	Quantity per unit
1	Front panel, 1U, aluminum, 3mm, anodized	1
2	Chassis with grille, carbon steel, 1mm, covered with aluminum zinc plate	1
3	Fan	3
4	Male connector (power input IEC-320)	1
5	Female connector (power output IEC-320)	1
6	Fuse clamp, a mechanical stress relief device for power lines	2
7	Luminous switch, green	1

Fan disk module

19 Inch fan module

- Complies with IEC60297-3-101 GB/T19520
- Low noise achieved through temperature dependent airflow
- Range options: 20 to 40 ° C and 30 to 50 ° C
- External sensors will automatically set the maximum speed when the sensor is damaged
- Function control through LED and potential free contacts
- Contact protection in accordance with DINENISO13857
- 2 versions, 24VDC or 230VAC
- Height: 1U
- Width: 19“
- Depth: 193/330/467/604 (customizable according to needs)
- Material: Panel (6063 profile/5052), shell part is covered with aluminum zinc plate

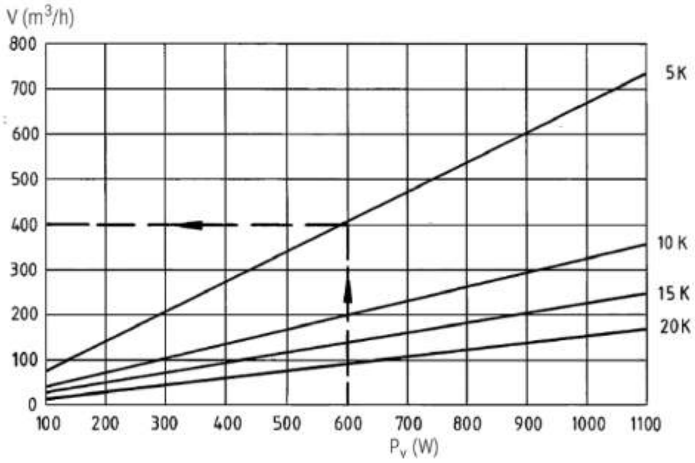

- For local heat dissipation, calculate the airflow required to dissipate the generated heat
- Cabinet ventilation is not considered here
- The calculation method for the required air volume is as follows: V= (f x Pv)/ΔT
- The air constant f is 3.3 m3K/Wh.
- Δ T is the temperature difference between the ambient temperature of the device and the ambient temperature of the inhaled air
- Example
  - Pv = 600 W
  -Inhalation of air: 25 ° C
  -The ambient temperature of the equipment is 30 ° C
- 1. ΔT = Ti – Tu = 30 °C – 25 °C = 5 K
- 2. Curve from Pv=600 W to Δ T=5 K
- 3. From the intersection point to the air volume V=400 m3/h

Subracks Accessories

PCB board protection strip

Product description

Board protection strip is mainly used for human inevitably cut each other when plugging and unplugging boards and components on the back, to play an effective protection and prevention role, to facilitate the installation of multiple boards and cards, thereby improving efficiency and reducing the damage to components during installation

Performance description

- Performance description
- Light size for easy installation.
- Mechanical limit, improve work efficiency.
- Fireproof standard: UL94V-0, EN45545-2
- Aging standard: GB/T7141-2008,,90°C, 6h
- Embrittlement standard: GB/T5470-2008, -55°C
- ROHS standard: conform to 2011/65/EU

Material and finish

PC，transparent

Cut-SIze

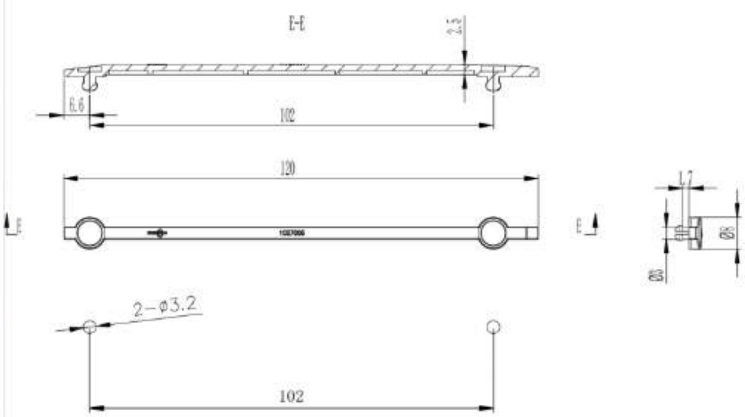

Order information

Name	Material	Order no
PCB board protection strip	Transparent PC	1037005

Multiple installation methods

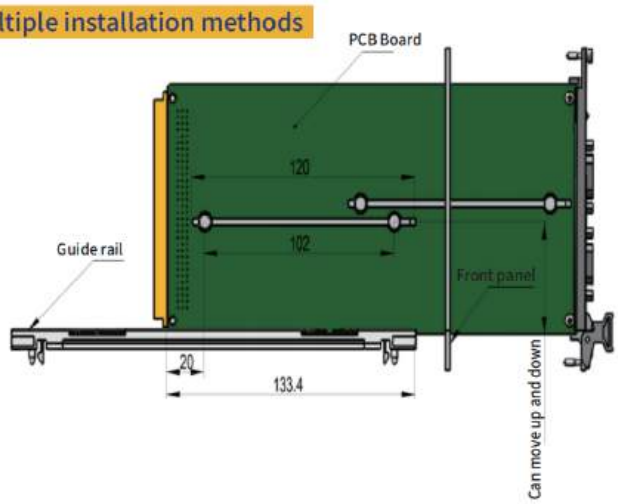

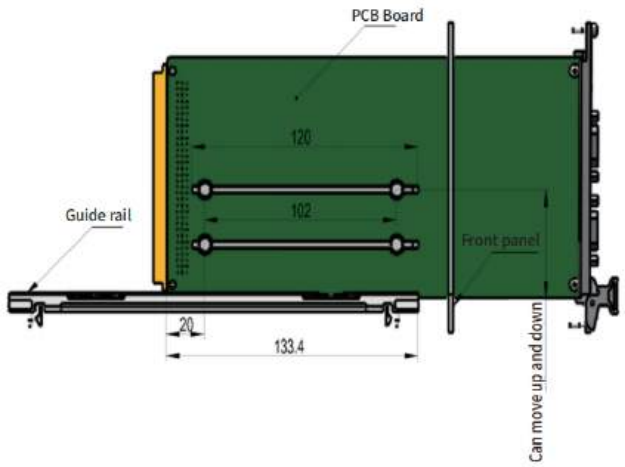

PCB board mechanical protection cover

PCB board mechanical protection cover

- Mechanical protection for PCB board soldering surfaces and electromagnetic compatibility springs
- Fixed holes comply with CPCI or VME specifications

Order information

Height	Describe	Order no
3U	Applicable board size 100x160, LCP, UL94V-0, ESD PC white frosted	1037001
3U	Applicable board size 100x220, LCP, UL94V-0, ESD PC white frosted	1037011
6U	Applicable board size 233.35x160, LCP, UL94V-0, ESD PC white frosted	1037002
6U	Applicable board size 233.35x220, LCP, UL94V-0, ESD PC white frosted	1037012

Sectional opening size

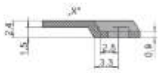

100X160mm hole size (3U160 board)

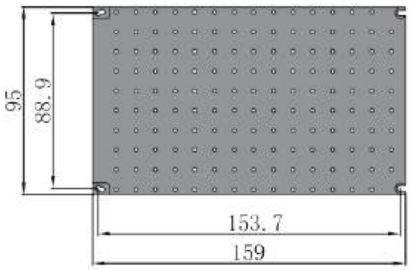

100X220mm hole size (3U220 board)

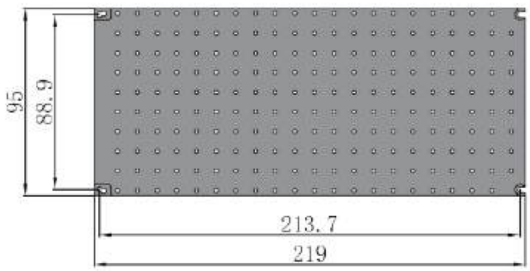

233.35X160mm hole size (6U160 board)

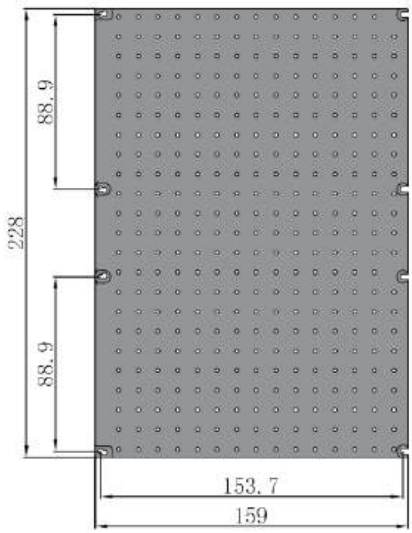

233.35X220mm hole size (6U220 board)

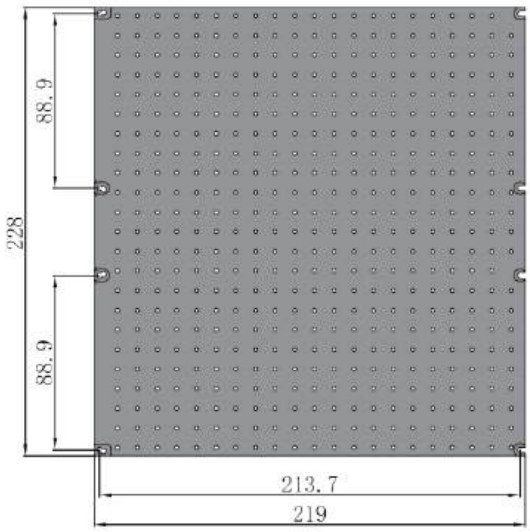

Subracks Accessories

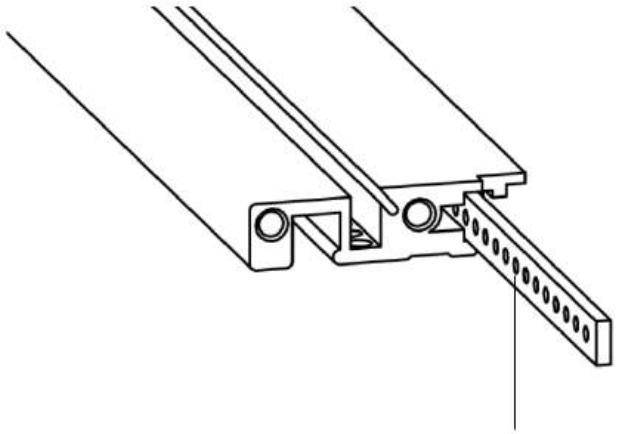

Threaded insert

Threaded insert

- For connecting panels or fixing back panels
- Installed in the cross member slot
- Material: Cold rolled steel

Order information

Order no	Name	Model	Model
1011116	Threaded insert	2x6	84TE
1011005	Threaded insert	2x6	63TE
1011003	Threaded insert	2x6	42TE
1011013	Threaded insert	2x5	84TE
1011012	Threaded insert	2x5	63TE
1011010	Threaded insert	2x5	42TE
1011020	Threaded insert	Raised type	84TE
1011019	Threaded insert	Raised type	63TE
1011017	Threaded insert	Raised type	42TE

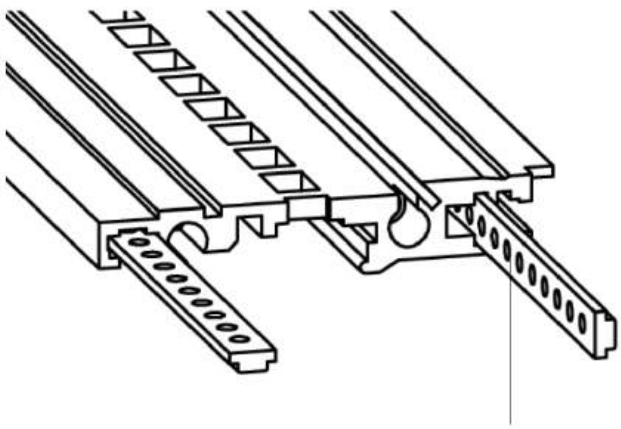

Raised type threaded insert

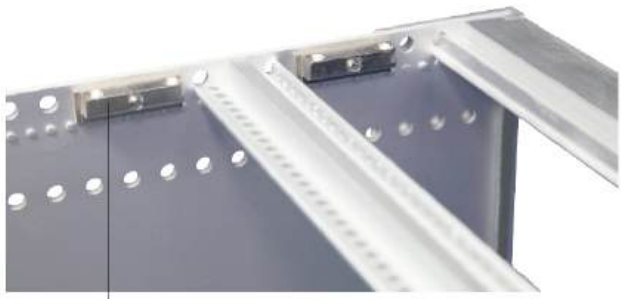

Cover plate printed board bracket

Cover plate printed board bracket

- Fastened to the side plate with screws
- For the attachment between side plate and cover plate, with shielding function
- Material: Aluminum profile

Order information

Order no	Name	Color	Colour code
1015007	Cover plate printed board bracket	Aluminum color	/

Subracks Accessories

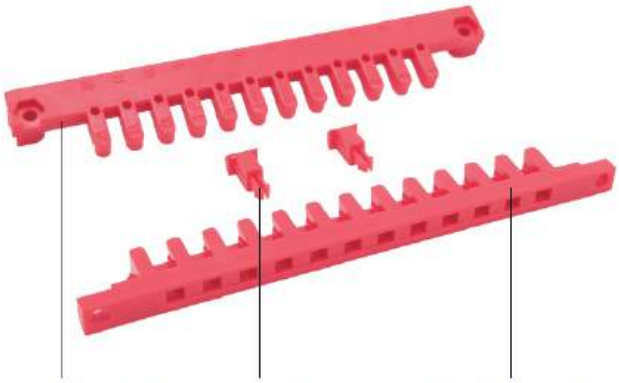

Anti misplug component

- Applicable to the coding of PCB board and back panel production
- The head and seat are mounted on the connector of the PCB and the back panel respectively
- Used to prevent the PCB board from being inserted into a non-corresponding slot
- Material: PC+20%GF

Order no	Name	Color	Colour code
1009006	Female strip	Red	RAL3018
1009005	Coding strip	Red	RAL3018
1009008	Coding pins	Red	RAL3018

Digital Strip

- Paste in cross member groove, starting point aligned with front flange
- Digital spacing 1TE, convenient for installation position and marking of rails and boards
- Material: PVC

Order information

Order no	Name	Colour code	Model
1012001	Digital Strip	RAL2011	84TE
1012002	Digital Strip	RAL2011	42TE

Subracks Accessories

ESD Electrostatic Discharge Clip

- Mounted on the end of the guide rail
- For electrostatic load discharge
- Material: Beryllium bronze

Order information

Order no	Name	Color
1010003	CPCI Guide rail ESD Electrostatic Discharge Clip	Natural color
1010004	Clip guide rail ESD Electrostatic Discharge Clip	Natural color

Insulation strip A

- Mounted on the rear cross member to insulate the cross member from the back panel and protect the internal components
- Only for EK&EG series subracks
- Material: PC+20%GF

Order information

Order no	Name	Model	Color	Colour code
1013001	Insulation strip A	21TE	Grey	RAL7032

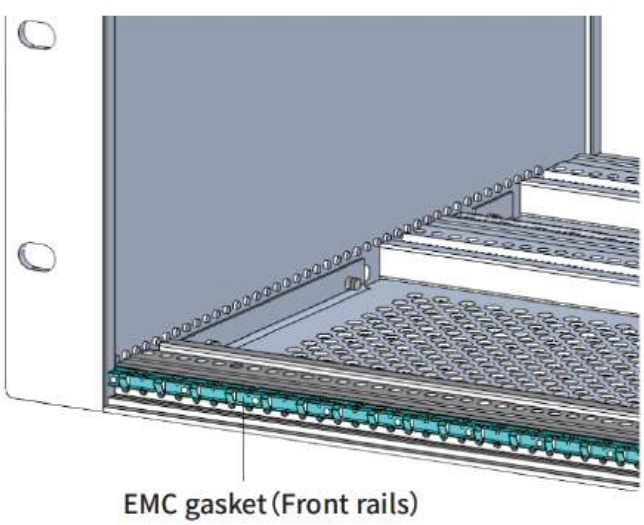

EMC gasket (Front rails)

- Installed on the inside of the front rails to form a g ood conductivity between the panel and the rail, thus increasing the shielding effect
- Only used in EK&EG series subracks
- Material: Stainless steel

Order information

Order no	Name	Model	Color
1008011	EMC gasket(Front rails)	42TE	Natural color
1008048	EMC gasket(Front rails)	63TE	Natural color
1008013	EMC gasket(Front rails)	84TE	Natural color
1008014	EMC gasket(Front rails)	104TE	Natural color

Subracks Accessories

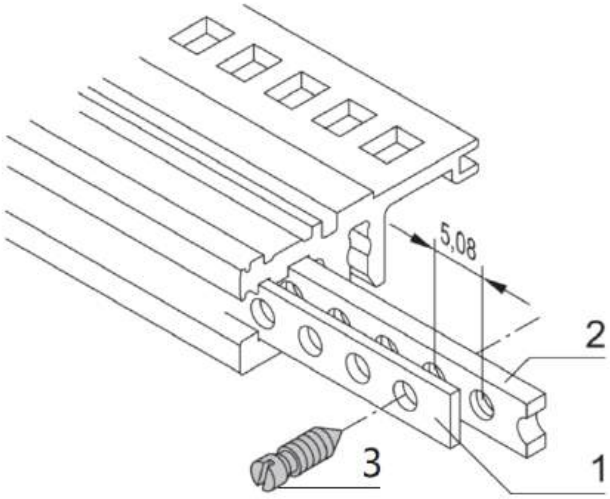

Perforated strip B

- Suitable for determining the center for shielded insertion devices
- Through-hole strip made of 1mm aluminum
- Material: Aluminum

Order information

Item	Order no	Name	Model
1	1011042	Perforated strip B	84TE
2	1011013	Threaded insert B	84TE
3	100426	Grub screw	M2.5*9

Insulation strip B

Insulation strip B

- For insulated mounting of back panel or for mounting metal plates as support for connectors
- Only for BEK&BEG series subracks
- Material: PC+20% GF

Order information

Order no	Name	Model	Color	Colour code
1013009	Insulation strip B	42TE	Grey	RAL7032
1013008	Insulation strip B	63TE	Grey	RAL7032
1013007	Insulation strip B	84TE	Grey	RAL7032

Subracks Accessories

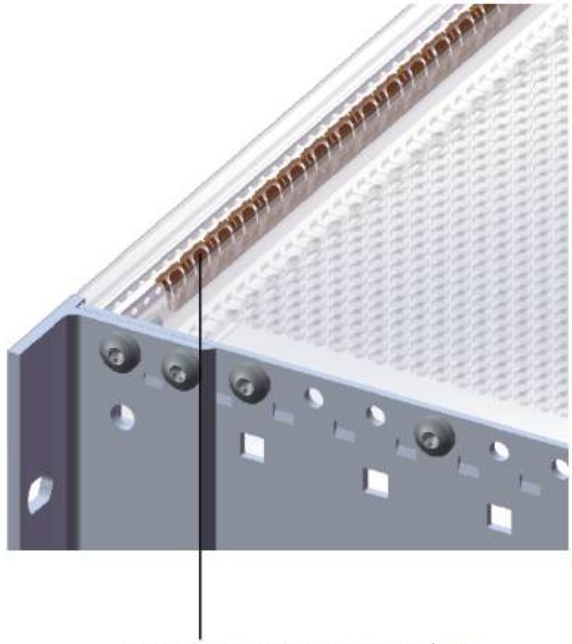

EMC gasket (Cover plate) B

EMC gasket (Cover plate) B

- Mounted on the cover plate, with mounted on the cover plate, and snapped into the cross member recess together with the cover plate
- Used for the conductive connection between the cover and the rail
- Material: Stainless steel

Order information

Order no	Name	Model	Color
1008041	EMC gasket (Cover plate) B	42TE	/
1008040	EMC gasket (Cover plate) B	63TE	/
1008034	EMC gasket (Cover plate) B	84TE	/
1008049	EMC gasket (Cover plate) B	104TE	/

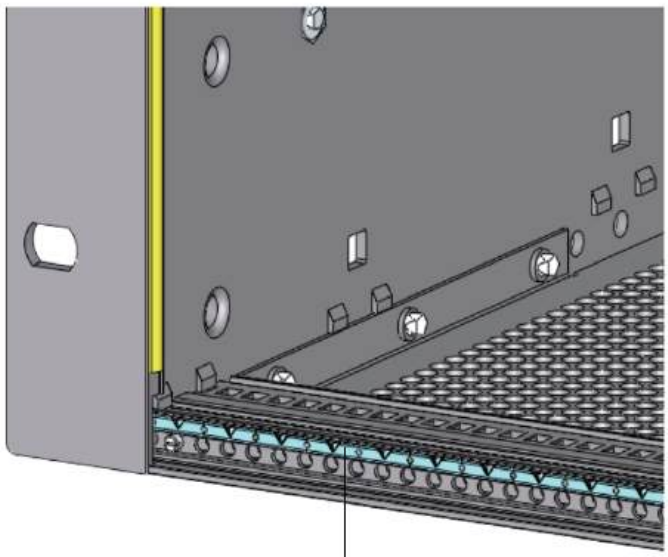

EMC gasket (Front rails) B

EMC gasket (Front rails) B

- Installed on the inside of the front rail to form a good conductivity between the panel and the rail, thus increasing the shielding effect
- Apply to BEK&BEG series subracks
- Material: Stainless steel

Order information

Order no	Name	Model	Color
1008047	EMC gasket (Front rails) B	42TE	/
1008042	EMC gasket (Front rails) B	63TE	/
1008033	EMC gasket (Front rails) B	84TE	/
1008046	EMC gasket (Front rails) B	104TE	/

Subracks Accessories

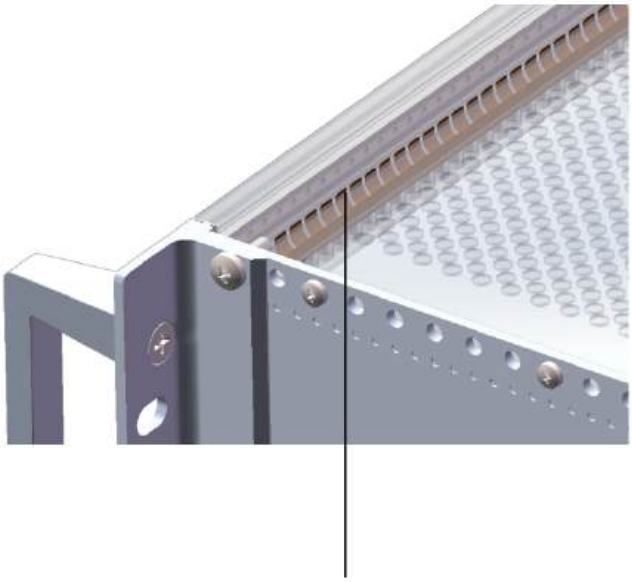

EMC gasket (Cover plate)

- Installed on the cover plate and snapped into the groove of the rail together with the cover plate
- Used for the conductive connection between the cover and the rail
- Material: Stainless steel

Order information

Order no	Name	Model	Color
1008050	EMC gasket (Cover plate)	42TE	/
1008051	EMC gasket (Cover plate)	63TE	/
1008010	EMC gasket (Cover plate)	84TE	/
1008052	EMC gasket (Cover plate)	104TE	/

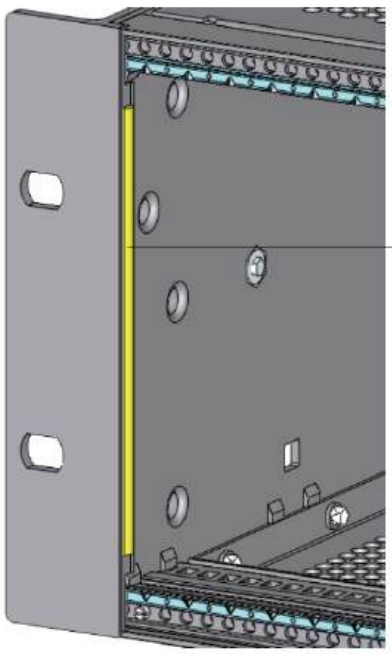

EMC textile gasket

- Paste on the outside of the panel for the panel to panel, panel to flange conductive connection
- Material: Conductive cloth EMC fabric gasket;
- Core: TPE foam

Order information

Order no	Name	Model	Color
1008037	EMC textile gasket	3U	/
1008045	EMC textile gasket	4U	/
1008038	EMC textile gasket	6U	/

Subracks Accessories

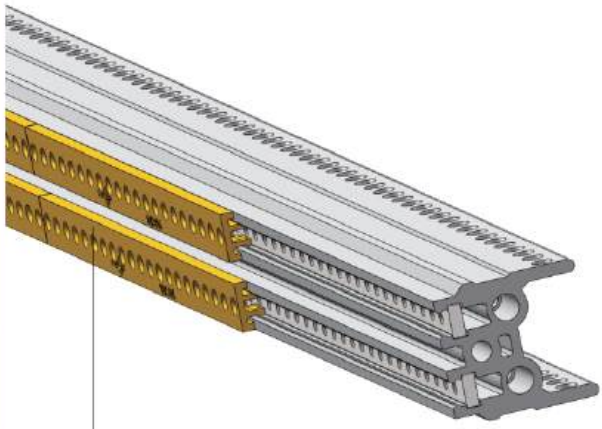

Insulation strip C

Insulation strip C

- For insulated mounting of back panel or for mounting metal plates as support for connectors
- Only for EK+&EG+ series subracks
- Material: PC+20% GF

Order information

Order no	Name	Model	Color	Colour code
1013006	Insulation strip C	21TE	Yellow	R251G179B0

Subracks Accessories

EMC gasket (Front panels)

- Installed in the panel or flange side, so that the vertical direction of the gap in the subrack to form a good conductive contact, to improve the overall shielding performance of the subrack
- Material: stainless steel, beryllium bronze

Order information

Order no	Name	Profile	Height
1008001	EMC gasket-type I	Panel-type I	3U
1008015	EMC gasket-type II	Panel-type II	3U
1008007	EMC gasket-Panel	Panel	3U
1008002	EMC gasket-type I	Panel-type I	4U
1008016	EMC gasket-type II	Panel-type II	4U
1008008	EMC gasket-Panel	Panel	4U
1008003	EMC gasket-type I	Panel-type I	6U
1008017	EMC gasket-type II	Panel-type II	6U
1008009	EMC gasket-Panel	Panel	6U

Subracks Accessories

Subracks Accessories

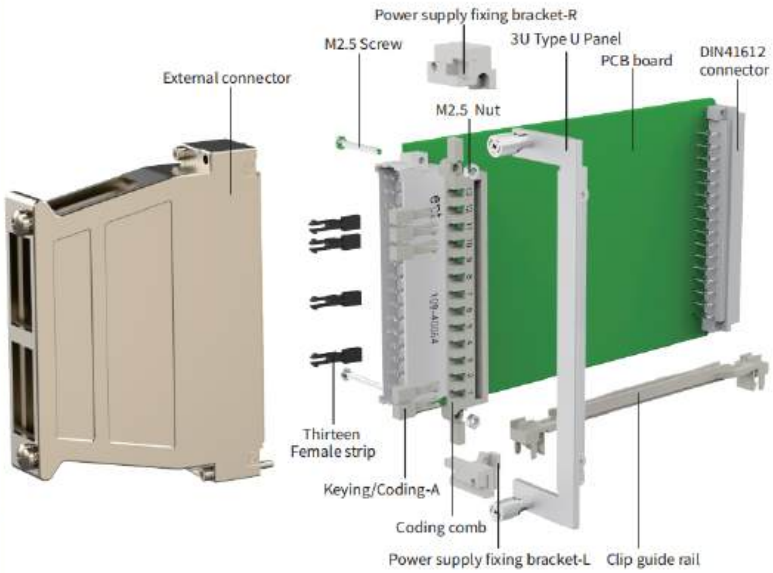

Encoding comb kit

- Installed on one side of the panel or flange to form good conductive contact at the vertical gap of the chassis, improving the overall shielding performance of the chassis
- Material: stainless steel, vacuum nickel plated

Installation dimension

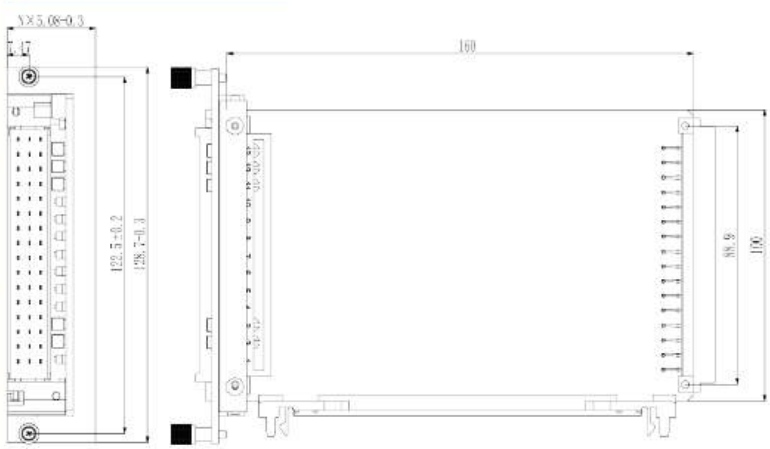

Delivery Comprises(kit)

Name	Qty	Order no	Description
Thirteen Female strip	13	1009004	Black, used with external connectors, PC+20GF
Keying/Coding-A	13	1009002	Gray, used in conjunction with the front-end connector of the board, PC+20GF
Coding comb	1	1009014	Gray, used in conjunction with the front-end connector of the board, ABS, vacuum nickel plated
Power supply fixing bracket-L	1	1009015	Gray, fixed coding comb and board front connector, vacuum nickel plated
Power supply fixing bracket-R	1	1009016	Gray, fixed coding comb and board front connector, vacuum nickel plated
M2.5 Nut	2	1005001	Circuit board to PCB bracket, PCB bracket to front panel, stainless steel
M2.5 Screw	2	/	Used for fixing PCB board fixing blocks
Panel	1	/	Profile panel, front anodized, back conductive oxidized
Clip guide rail	1	1001045	Used for PCB boards with a thickness of 1.6-2.0mm, PC+20GF
External connector	1	/	External connector, connecting power board card

Subracks Plastic foot

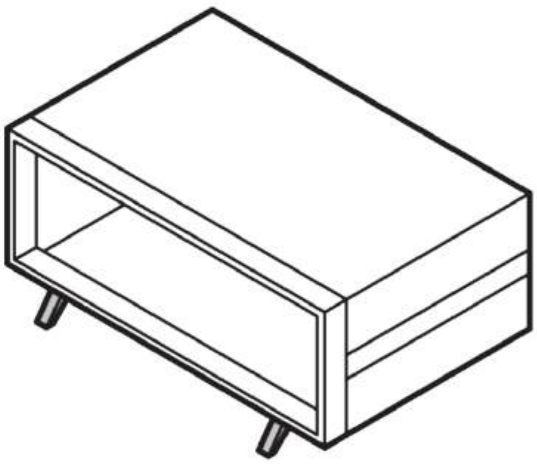

Subracks Plastic foot

Product description

- Suitable for replacing standard round feet
- Bearing capacity: 25 kg/ft
- Maximum chassis weight: 40 kilograms
- Rubber blocks can fix the chassis in place, effectively preventing the chassis from sliding
- Reserved installation holes on the bottom cover of the chassis
- The installation hole position can be determined according to different products
- Supporting foot support for use together
- Optional hexagon socket head screw M4 * 12, ∅ 4 flat washer, M4 nut

Performance description

- High temperature aging standard: GB/T7141-2008, 90°C 6 h
- Low temperature catalysis standard: GB/T5470-2008, -55°C
- Fire and flame retardant standards: UL94V-0,EN45545-2
- ROHS standard: 2011/65/EU

Cut-Size

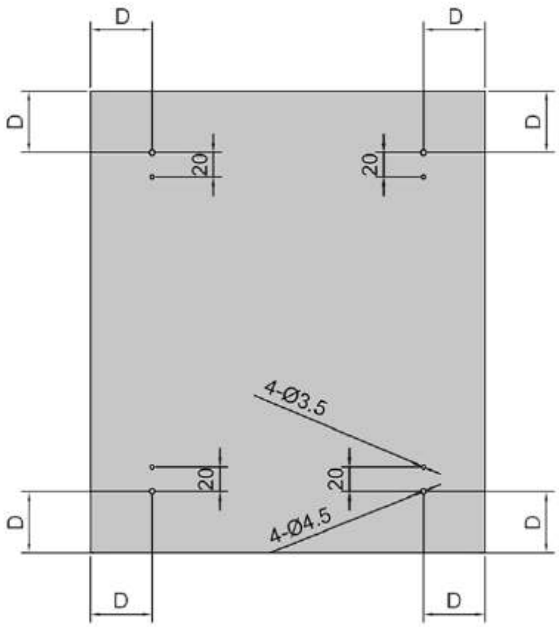

Material and finish

- PA; Rubber

Order information

Order no	Name	Model	Color	Colour code
1033007	Plastic foot	Can be folded	Grey	RAL7045
1033008	Subracks support	/	Grey	RAL7045
1033009	Plastic foot	Can be folded	Black	RAL9011
1033010	Subracks support	/	Black	RAL9011

Subracks Accessories

Screw

	Description	Application	Material	SIze	Qty/PU	Order no
	Cross/captive screws GB 837-88	For assembly of front panels if threaded strips are used	Stainless steel	M2.5*11	1	1004333
	Cross/captive screws GB 837-88	For assembly of front panels	Stainless steel	M2.5*12	1	1004023
	One word/captive screw GB 837-88	For assembly of front panels	Stainless steel	M2.5*12	1	1004025
	Collar screw with Pozidrive/slot GB 837-88	For assembly of front panels	Stainless steel	M2.5*12	1	1004026
	One word/captive screw GB 837-88	For assembly of front panels	Nickeling	M2.5*12	1	1004028
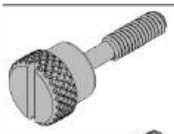	Collar screw with knurled head GB 837-88	For assembly of front panels	Stainless steel	M2.5*16.5	1	1004279
	Collar screw with knurled head GB 837-88	For assembly of front panels	Stainless steel	M2.5*18.5	1	1004095
	Collar screw with knurled head GB 837-88	For assembly of front panels	Stainless steel	M2.5*18.5	1	1004096
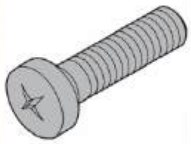	Cross recessed pan head screws GB/T818-2000	Three section panel with springs and contact profiles	Stainless steel, black	M2.5*5	1	1004185
	Cross recessed pan head screws GB/T818-2000	Connector to Z-shaped profile, Z-shaped profile to horizontal connecting rail, V-handle/VI handle to panel, plug-in board guide rail to horizontal connecting rail, carrier board panel	Stainless steel	M2.5*6	1	1004004
	Cross recessed pan head screws GB/T818-2000	Insert the card into the card holder, insert the 6U card into the auxiliary pull handle	Stainless steel	M2.5*8	1	1004005
	Cross recessed pan head screws GB/T818-2000	Insert card into card holder, bus backplane to threaded hole plate	Stainless steel	M2.5*10	1	1004006
	Cross recessed pan head screws GB/T818-2000	Connector to circuit board, fixing of plug-in unit handle	Stainless steel	M2.5*12	1	1004310
	Cross recessed pan head screws GB/T818-2000	Fixing the handle of the plug-in unit	Stainless steel, Without adhesive	M2.5*16	1	1004352
	Cross recessed pan head screws GB/T818-2000	Used to fix the backboard	Stainless steel, With glue	M2.5*16	1	1004008
	Cross recessed pan head screws GB/T818-2000	Rear panel to module box	Stainless steel	M3*8	1	1004034
	Cross recessed pan head screws GB/T818-2000	Fixing the crossbeam in the Compac chassis	Stainless steel	M5*12	1	1004339
	Cross shaped slotted pan head screw GB/T818-2000	EMC panel to horizontal connecting rail, EMC partition frame, for covering the front profile of the horizontal internal installation kit	Nickeling	M2.5*11	1	1004245
	Screw+securing washer GB/T9074.4-2018	Used to fix the backboard	Stainless steel	M2.5*12	1	1004020

Subracks Accessories

Screw

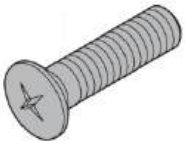

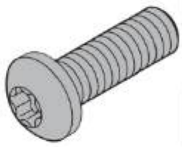

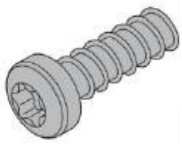

Description	Application	Material	Size	Qty/PU	Order no
Pozidrive c/sk screw GB/T819.1-2000	For plastic handle 3 HP/4 HP on front panel of plug-in	Stainless steel	M2.5*5	1	1004012
Pozidrive c/sk screw GB/T819.1-2000	For plastic handle 3 HP/4 HP on front panel of plug-in units	Stainless steel	M2.5*6	1	1004011
Pozidrive c/sk screw GB/T819.1-2000	For printed boards on front panel	Stainless steel	M2.5*8	1	1004015
Countersunk screw pozidrive/slot GB/T819.1-2000	For printed boards on front panel	Stainless steel	M2.5*8	1	1004266
Pozidrive c/sk screw GB/T819.1-2000	For printed board bracket on the front panel	Stainless steel	M2.5*10	1	1004014
Pozidrive c/sk screw GB/T819.1-2000	To screw on cover plate	Stainless steel	M3*6	1	1004040
Pozidrive c/sk screw GB/T819.1-2000	For printed board bracket on the front panel	Stainless steel	M3*8	1	1004041
Pozidrive c/sk screw GB/T819.1-2000	For printed board bracket on the front panel	Stainless steel, boiling black	M3*8	1	1004042
Torx panhead screw GB 2672-86	For prined board assembly	Stainless steel	M2.5*6	1	1004241
Torx panhead screw GB 2672-86	For Z-rails and connector assembly	Stainless steel	M2.5*7	1	1004273
Torx panhead screw GB 2672-86	For perforated rail	Stainless steel	M2.5*10	1	1004277
Torx panhead screw GB 2672-86	For backplane assembly	nickeling	M2.5*14	1	1004262
Torx panhead screw GB 2672-86	Used for fixing crossbeams	Stainless steel	M4*4.5	1	1004336
Torx panhead screw GB 2672-86	Used for fixing crossbeams	Galvanized carbon steel	M4*4.5	1	1004337
Torx panhead screw GB 2672-86	Cover plate and tray used to fix the chassis	Stainless steel	M4*6	1	1004240
Torx panhead screw GB 2672-86	Used for fixing crossbeams	Stainless steel	M4*10	1	1004242
Torx panhead screw GB 2672-86	Used for fixing crossbeams	Galvanization	M4*14	1	1004251
Torx countersunk screw, self-tapping GB 2672-86	Fixed for aluminum profile guide rails	Stainless steel	M2.5*7.3	1	1004230
Torx countersunk screw, self-tapping GB 2672-86	Fixed for Plastic Guides	Stainless steel	M2.5*9.3	1	1004231
Torx countersunk screw, self-tapping GB 2672-86	For backplane assembly	Stainless steel	M2.5*12	1	1004272

Subracks Accessories

Screw

	Description	Application	Material	Size	Qty/PU	Order no
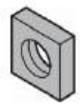	Square nut GB 39-88	For handle on front panel of plug-in	Stainless steel	M2.5	1	1005002
	Hex nut GB/T41-2000	For printed boards on front panel	Stainless steel	M2.5	1	1005001
	Metal sleeve	For assembly of front panels	Plastics	M2.5	1	1014002
	Metal sleeve	For assembly of front panels	Brass, nickel plated	M2.5	1	1014003
	Cover plate printed board bracket	Assembly of cover plate and Side panel	Aluminum products	/	1	1015007
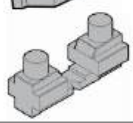	Plastic parts	V-handle to panel assembly	Plastics	/	1	1000066
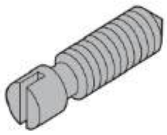	Grub screw DIN553-1986	For threaded inserts M2.5	Stainless steel	M2.5*8	1	1004227
	Grub screw DIN553-1986	For threaded inserts M2.5 and perforated strips	Stainless steel	M2.5*9	1	1004226

I Panel component

3U Panel component

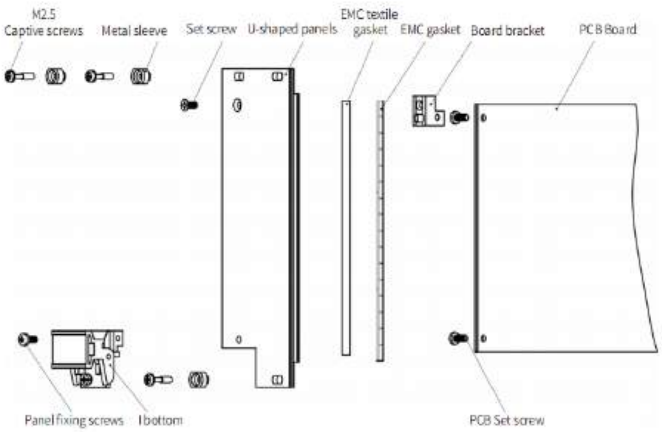

Panel profile

I profile　　II profile　　III profile

Delivery Comprises(kit)

Name	Qty	Order no	Description
I bottom	1	1002003	Install in the bottom panel
Metal sleeve	3	1014002	Plastic
Metal sleeve	3	1014003	Brass
U-shaped panels	1	/	Front anodised rear conductive
EMC textile gasket	1	1008038	Textile gasket
Captive screws	3	1004023	Cross/captive screws M2.5×12 Stainless steel
EMC gasket	1	1008015	Shielding tape
PCB Set screw	2	1004004	Pan head Pozidrive c/sk screw M2.5×6 Stainless steel
Set screw	1	1004011	Pozidrive c/sk screw Stainless steel
Panel fixing screws	1	1004004	Pan head Pozidrive c/sk screw M2.5×6 Stainless steel
Printed board bracket	1	1015004	Printed board bracket, Die-cast zinc

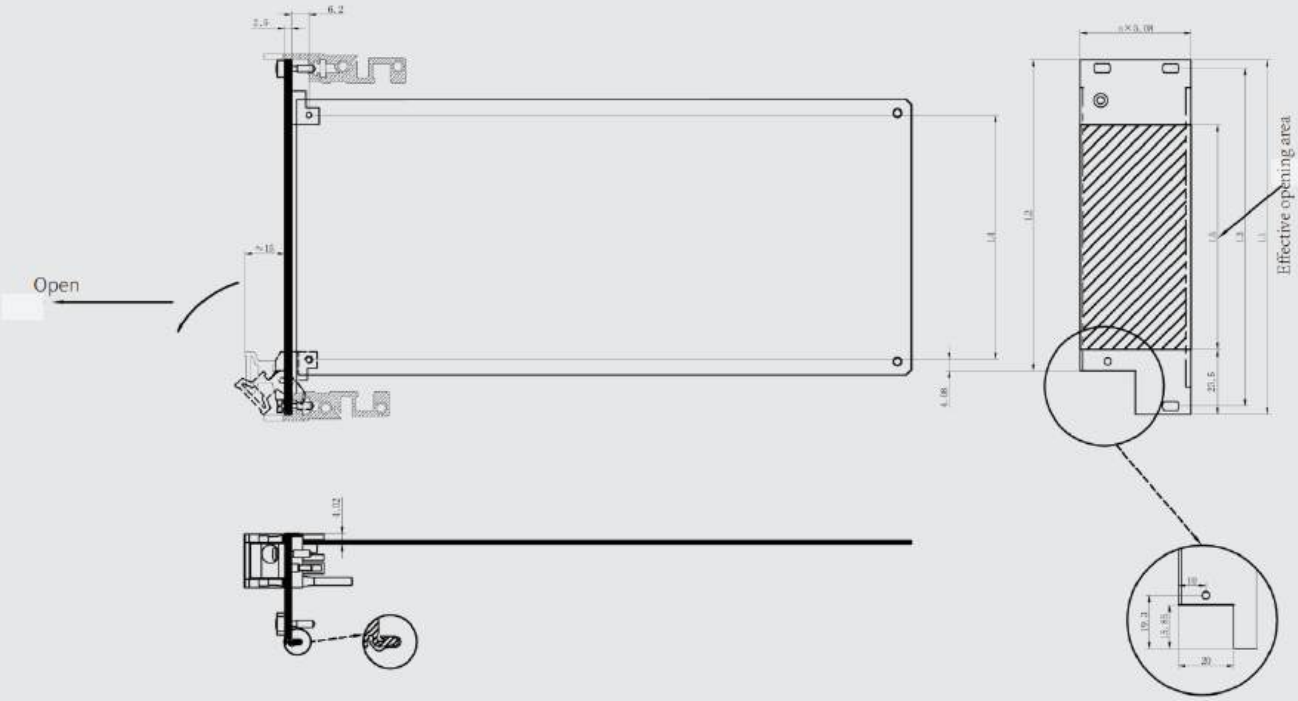

Effective opening area

Height	L1mm	L2mm	L3mm	L4mm	L5mm
3U	128.7	112.85	122.5	88.9	81.7
4U	173.15	157.3	166.95	133.35	126.15
6U	262.05	246.2	255.85	222.25	215.05
9U	395.4	379.55	389.2	355.6	348.4

I Panel component

3U Panel component

I Handle order information

Width	I Panel	II Panel	III Panel	EMC gasket	EMC textile gasket	Grey handle	Black handle	Order no
4HP	1			1		1		130402130
4HP		1		1		1		230402130
4HP			1	1		1		330402130
4HP			1		1	1		330402131
4HP	1			1			1	130402140
4HP		1		1			1	230402140
4HP			1	1			1	330402140
4HP			1		1		1	330402141
5HP	1			1		1		130502130
5HP		1		1		1		230502130
5HP			1	1		1		330502130
5HP			1		1	1		330502131
5HP	1			1			1	130502140
5HP		1		1			1	230502140
5HP			1	1			1	330502140
5HP			1		1		1	330502141
6HP	1			1		1		130602130
6HP		1		1		1		230602130
6HP			1	1		1		330602130
6HP			1		1	1		330602131
6HP	1			1			1	130602140
6HP		1		1			1	230602140
6HP			1	1			1	330602140
6HP			1		1		1	330602141
7HP	1			1		1		130702130
7HP		1		1		1		230702130
7HP			1	1		1		330702130
7HP			1		1	1		330702131
7HP	1			1			1	130702140
7HP		1		1			1	230702140
7HP			1	1			1	330702140
7HP			1		1		1	330702141
8HP	1			1		1		130802130
8HP		1		1		1		230802130
8HP			1	1		1		330802130
8HP			1		1	1		330802131
8HP	1			1			1	130802140
8HP		1		1			1	230802140
8HP			1	1			1	330802140
8HP			1		1		1	330802141
10HP	1			1		1		131002130
10HP		1		1		1		231002130
10HP			1	1		1		331002130
10HP			1		1	1		331002131
10HP	1			1			1	131002140
10HP		1		1			1	231002140
10HP			1	1			1	331002140
10HP			1		1		1	331002141
12HP	1			1		1		131202130
12HP		1		1		1		231202130
12HP			1	1		1		331202130
12HP			1		1	1		331202131
12HP	1			1			1	131202140
12HP		1		1			1	231202140
12HP			1	1			1	331202140
12HP			1		1		1	331202141

I Panel component

6U Panel component

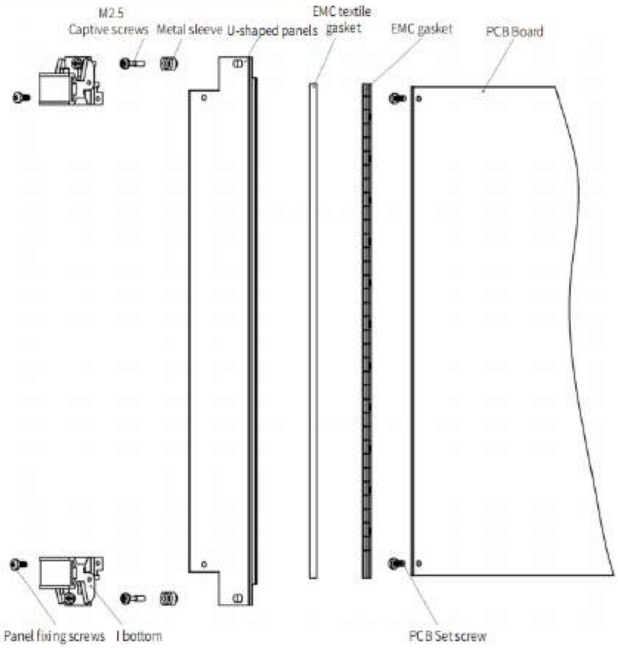

Panel profile

I profile II profile III profile

Delivery Comprises(kit)

Name	Qty	Order no	Description
I Top	1	1002001	Install in the top panel
I bottom	1	1002003	Install in the bottom panel
Metal sleeve	2	1014002	Plastic
Metal sleeve	2	1014003	Brass
U-shaped panels	1	/	Front anodised rear conductive
Textile gasket	1	1008038	Textile gasket
Captive screws	2	1004023	Cross/captive screws M2.5×12 Stainless steel
Panel fixing screws	2	1004004	Pan head Pozidrive c/sk screw M2.5×6 Stainless steel
EMC gasket	1	1008015	Shielding tape
PCB Set screw	2	1004004	Pan head Pozidrive c/sk screw M2.5×6 Stainless steel

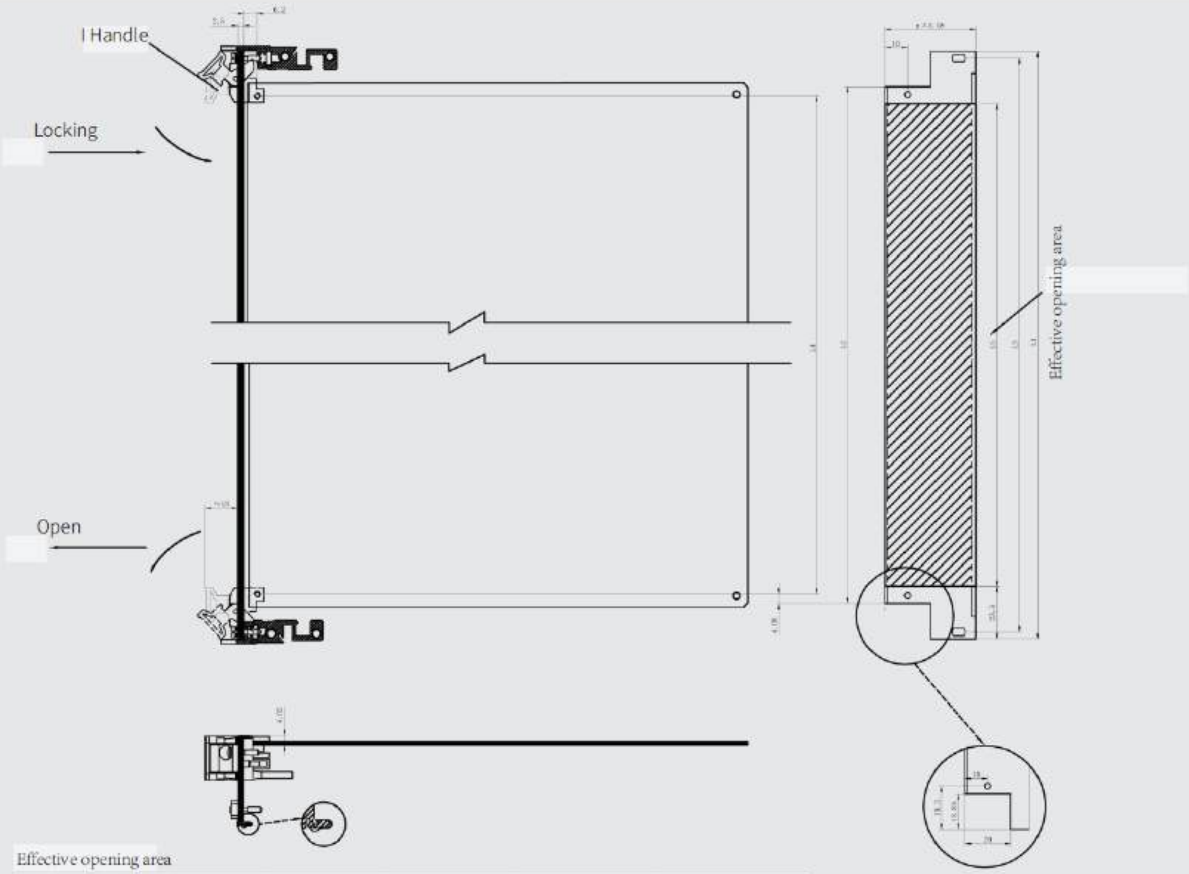

Effective opening area

Height	L1mm	L2mm	L3mm	L4mm	L5mm
3U	128.7	112.85	122.5	88.9	81.7
4U	173.15	157.3	166.95	133.35	126.15
6U	262.05	246.2	255.85	222.25	215.05
9U	395.4	379.55	389.2	355.6	348.4

I Panel component

6U Panel component

I Handle order information

Width	I Panel	II Panel	III Panel	EMC gasket	EMC textile gasket	Grey handle	Black handle	Order no
4HP	1			1		1		160402130
4HP		1		1		1		260402130
4HP			1	1		1		360402130
4HP			1		1	1		360402131
4HP	1			1			1	160402140
4HP		1		1			1	260402140
4HP			1	1			1	360402140
4HP			1		1		1	360402141
5HP	1			1		1		160502130
5HP		1		1		1		260502130
5HP			1	1		1		360502130
5HP			1		1	1		360502131
5HP	1			1			1	160502140
5HP		1		1			1	260502140
5HP			1	1			1	360502140
5HP			1		1		1	360502141
6HP	1			1		1		160602130
6HP		1		1		1		260602130
6HP			1	1		1		360602130
6HP			1		1	1		360602131
6HP	1			1			1	160602140
6HP		1		1			1	260602140
6HP			1	1			1	360602140
6HP			1		1		1	360602141
7HP	1			1		1		160702130
7HP		1		1		1		260702130
7HP			1	1		1		360702130
7HP			1		1	1		360702131
7HP	1			1			1	160702140
7HP		1		1			1	260702140
7HP			1	1			1	360702140
7HP			1		1		1	360702141
8HP	1			1		1		160802130
8HP		1		1		1		260802130
8HP			1	1		1		360802130
8HP			1		1	1		360802131
8HP	1			1			1	160802140
8HP		1		1			1	260802140
8HP			1	1			1	360802140
8HP			1		1		1	360802141
10HP	1			1		1		161002130
10HP		1		1		1		261002130
10HP			1	1		1		361002130
10HP			1		1	1		361002131
10HP	1			1			1	161002140
10HP		1		1			1	261002140
10HP			1	1			1	361002140
10HP			1		1		1	361002141
12HP	1			1		1		161202130
12HP		1		1		1		261202130
12HP			1	1		1		361202130
12HP			1		1	1		361202131
12HP	1			1			1	161202140
12HP		1		1			1	261202140
12HP			1	1			1	361202140
12HP			1		1		1	361202141

I-SX Panel component

3U Panel component

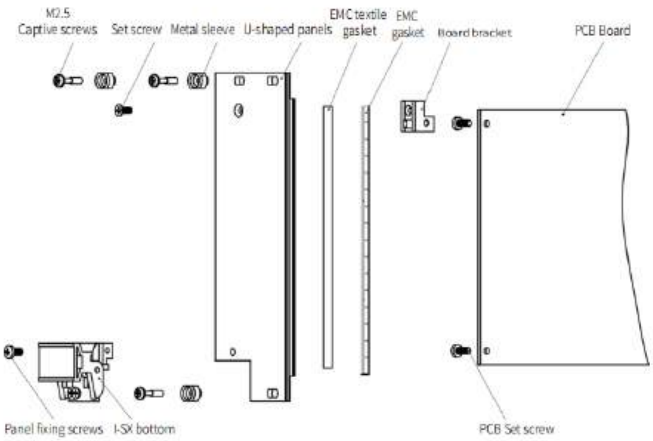

Panel profile

I profile　　II profile　　III profile

Delivery Comprises(kit)

Name	Qty	Order no	Description
I -SX bottom	1	1002007	Install in the bottom panel
Metal sleeve	3	1014002	Plastic
Metal sleeve	3	1014003	Brass
U-shaped panels	1	/	Front anodised rear conductive
EMC textile gasket	1	1008038	Textile gasket
Captive screws	3	1004023	Cross/captive screws M2.5×12 Stainless steel
EMC gasket	1	1008015	Shielding tape
PCB Set screw	2	1004004	Pan head Pozidrive c/sk screw M2.5×6 Stainless steel
Set screw	1	1004011	Pozidrive c/sk screw Stainless steel
Panel fixing screws	1	1004004	Pan head Pozidrive c/sk screw M2.5×6 Stainless steel
Printed board bracket	1	1015004	Printed board bracket, Die-cast zinc

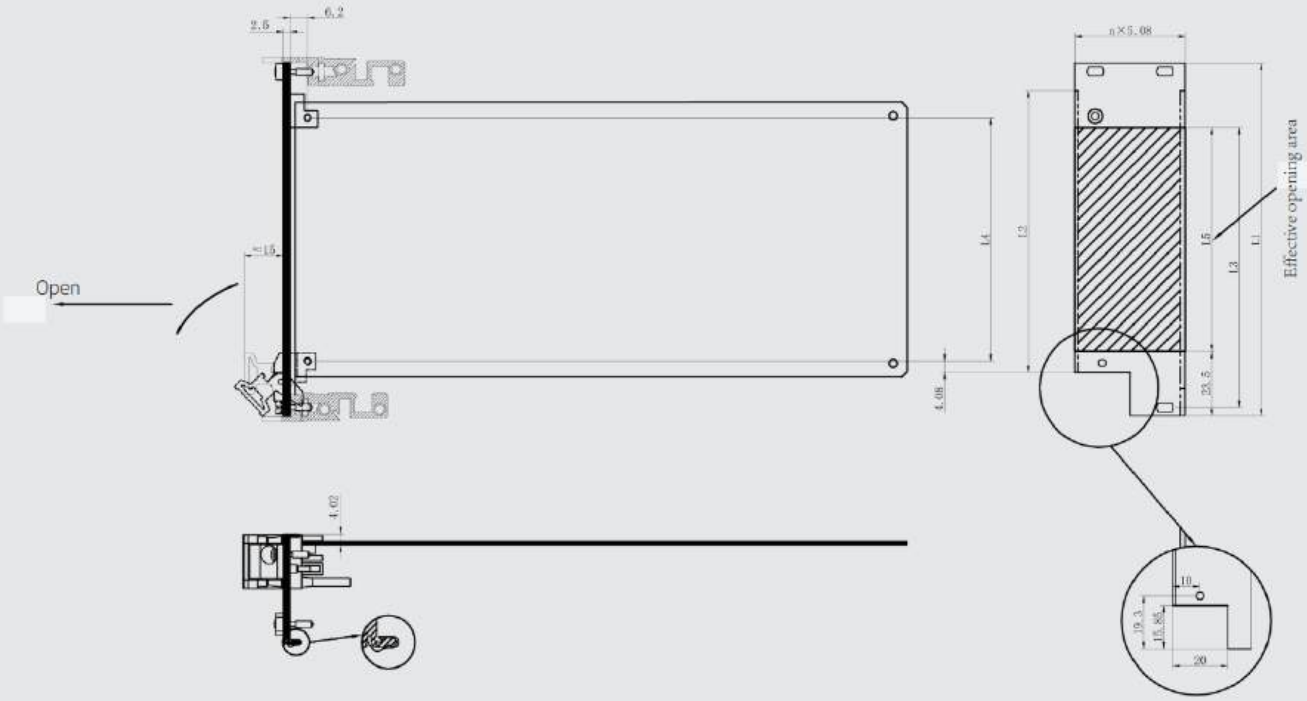

Effective opening area

Height	L1mm	L2mm	L3mm	L4mm	L5mm
3U	128.7	96.9	122.5	88.9	81.7
4U	173.15	141.35	166.95	133.35	126.15
6U	262.05	230.25	255.85	222.25	215.05
9U	395.4	363.6	389.2	355.6	348.4

I-SX Panel component

瑞德科诺 RDEKON

3U Panel component

I-SX Handle order information

Width	I Panel	II Panel	III Panel	EMCgasket	EMC textile gasket	Grey handle	Black handle	Order no
4HP	1			1		1		130402230
4HP		1		1		1		230402230
4HP			1	1		1		330402230
4HP			1		1	1		330402231
4HP	1			1			1	130402240
4HP		1		1			1	230402240
4HP			1	1			1	330402240
4HP			1		1		1	330402241
5HP	1			1		1		130502230
5HP		1		1		1		230502230
5HP			1	1		1		330502230
5HP			1		1	1		330502231
5HP	1			1			1	130502240
5HP		1		1			1	230502240
5HP			1	1			1	330502240
5HP			1		1		1	330502241
6HP	1			1		1		130602230
6HP		1		1		1		230602230
6HP			1	1		1		330602230
6HP			1		1	1		330602231
6HP	1			1			1	130602240
6HP		1		1			1	230602240
6HP			1	1			1	330602240
6HP			1		1		1	330602241
7HP	1			1		1		130702230
7HP		1		1		1		230702230
7HP			1	1		1		330702230
7HP			1		1	1		330702231
7HP	1			1			1	130702240
7HP		1		1			1	230702240
7HP			1	1			1	330702240
7HP			1		1		1	330702241
8HP	1			1		1		130802230
8HP		1		1		1		230802230
8HP			1	1		1		330802230
8HP			1		1	1		330802231
8HP	1			1			1	130802240
8HP		1		1			1	230802240
8HP			1	1			1	330802240
8HP			1		1		1	330802241
10HP	1			1		1		131002230
10HP		1		1		1		231002230
10HP			1	1		1		331002230
10HP			1		1	1		331002231
10HP	1			1			1	131002240
10HP		1		1			1	231002240
10HP			1	1			1	331002240
10HP			1		1		1	331002241
12HP	1			1		1		131202230
12HP		1		1		1		231202230
12HP			1	1		1		331202230
12HP			1		1	1		331202231
12HP	1			1			1	131202240
12HP		1		1			1	231202240
12HP			1	1			1	331202240
12HP			1		1		1	331202241

I-SX Panel component

6U Panel component

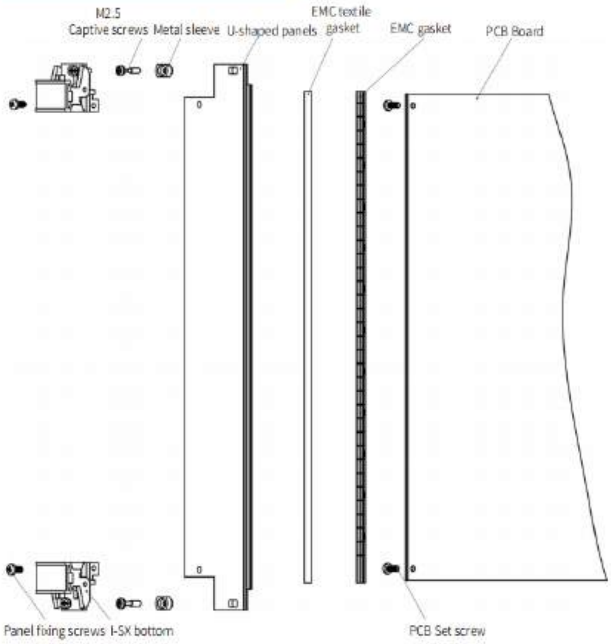

Panel profile

I profile　　II profile　　III profile

Delivery Comprises(kit)

Name	Qty	Order no	Description
I-SX Top	1	1002006	Install in the top panel
I-SX bottom	1	1002007	Install in the bottom panel
Metal sleeve	2	1014002	Plastic
Metal sleeve	2	1014003	Brass
U-shaped panels	1	/	Front anodised rear conductive
Textile gasket	1	1008038	Textile gasket
Captive screws	2	1004023	Cross/captive screws M2.5×12 Stainless steel
Panel fixing screws	2	1004004	Pan head Pozidrive c/sk screw M2.5×6 Stainless steel
EMC gasket	1	1008015	Shielding tape
PCB Set screw	2	1004004	Pan head Pozidrive c/sk screw M2.5×6 Stainless steel

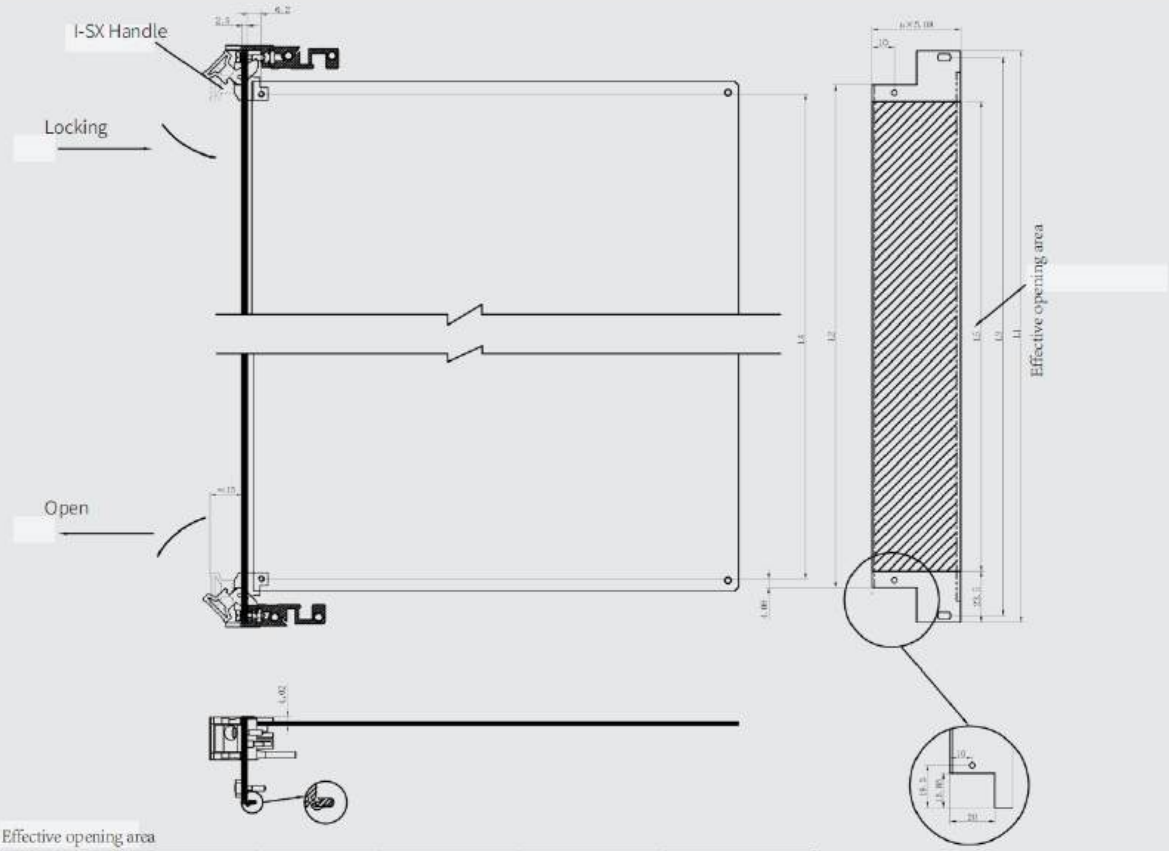

Effective opening area

Height	L1mm	L2mm	L3mm	L4mm	L5mm
3U	128.7	96.9	122.5	88.9	81.7
4U	173.15	141.35	166.95	133.35	126.15
6U	262.05	230.25	255.85	222.25	215.05
9U	395.4	363.6	389.2	355.6	348.4

I-SX Panel component

6U Panel component

I-SX Handle order information

Width	I Panel	II Panel	III Panel	EMCgasket	EMC textile gasket	Grey handle	Black handle	Order no
4HP	1			1		1		160402230
4HP		1		1		1		260402230
4HP			1	1		1		360402230
4HP			1		1	1		360402231
4HP	1			1			1	160402240
4HP		1		1			1	260402240
4HP			1	1			1	360402240
4HP			1		1		1	360402241
5HP	1			1		1		160502230
5HP		1		1		1		260502230
5HP			1	1		1		360502230
5HP			1		1	1		360502231
5HP	1			1			1	160502240
5HP		1		1			1	260502240
5HP			1	1			1	360502240
5HP			1		1		1	360502241
6HP	1			1		1		160602230
6HP		1		1		1		260602230
6HP			1	1		1		360602230
6HP			1		1	1		360602231
6HP	1			1			1	160602240
6HP		1		1			1	260602240
6HP			1	1			1	360602240
6HP			1		1		1	360602241
7HP	1			1		1		160702230
7HP		1		1		1		260702230
7HP			1	1		1		360702230
7HP			1		1	1		360702231
7HP	1			1			1	160702240
7HP		1		1			1	260702240
7HP			1	1			1	360702240
7HP			1		1		1	360702241
8HP	1			1		1		160802230
8HP		1		1		1		260802230
8HP			1	1		1		360802230
8HP			1		1	1		360802231
8HP	1			1			1	160802240
8HP		1		1			1	260802240
8HP			1	1			1	360802240
8HP			1		1		1	360802241
10HP	1			1		1		161002230
10HP		1		1		1		261002230
10HP			1	1		1		361002230
10HP			1		1	1		361002231
10HP	1			1			1	161002240
10HP		1		1			1	261002240
10HP			1	1			1	361002240
10HP			1		1		1	361002241
12HP	1			1		1		161202230
12HP		1		1		1		261202230
12HP			1	1		1		361202230
12HP			1		1	1		361202231
12HP	1			1			1	161202240
12HP		1		1			1	261202240
12HP			1	1			1	361202240
12HP			1		1		1	361202241

III Panel component

3U Panel component

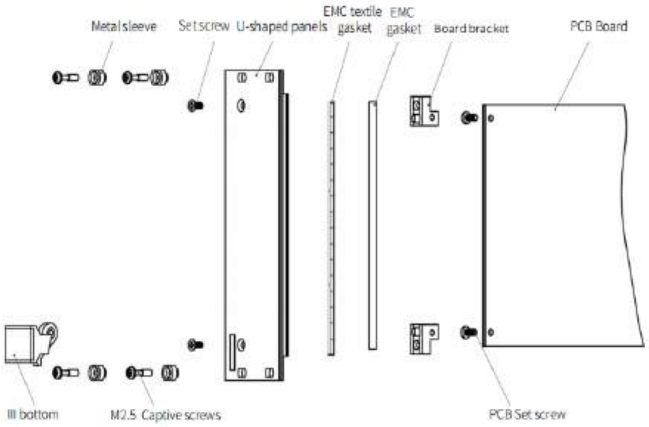

Panel profile

I profile　　II profile　　III profile

Delivery Comprises(kit)

Name	Qty	Order no	Description
III bottom	1	1002008	Install in the bottom panel
Metal sleeve	4	1014002	Plastic
Metal sleeve	4	1014003	Brass
U-shaped panels	1	/	Front anodised rear conductive
EMC textile gasket	1	1008038	Textile gasket
Captive screws	4	1004023	Cross/captive screws M2.5×12 Stainless steel
EMC gasket	1	1008015	Shielding tape
PCB Set screw	2	1004004	Pan head Pozidrive c/sk screw M2.5×6 Stainless steel
Set screw	2	1015004	Pozidrive c/sk screw Stainless steel
Printed board bracket	2	1004011	Printed board bracket, Die-cast zinc

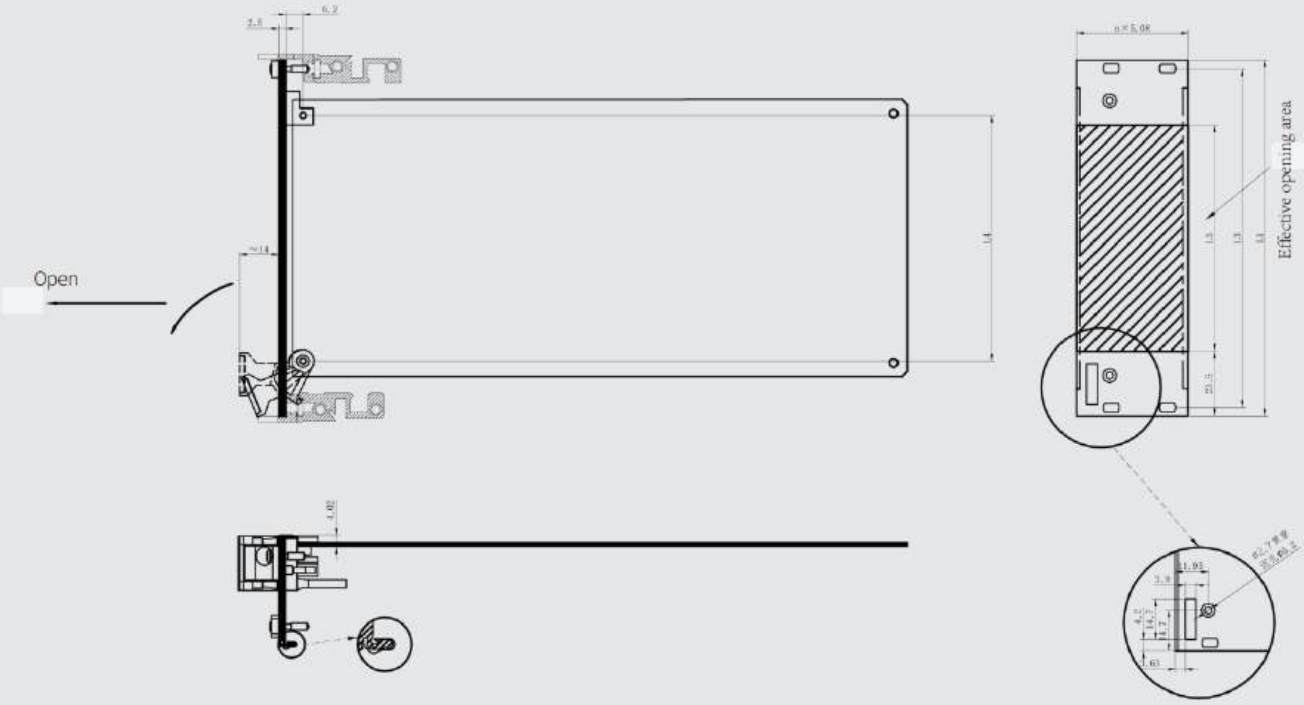

Effective opening area

Height	L1mm	L3mm	L4mm	L5mm
3U	128.7	122.5	88.9	81.7
4U	173.15	166.95	133.35	126.15
6U	262.05	255.85	222.25	215.05
9U	395.4	389.2	355.60	348.4

III Panel component

3U Panel component

III Handle order information

Width	I Panel	II Panel	III Panel	EMCgasket	EMC textile gasket	Grey handle	Black handle	Order no
4HP	1			1		1		130402330
4HP		1		1		1		230402330
4HP			1	1		1		330402330
4HP			1		1	1		330402331
4HP	1			1			1	130402340
4HP		1		1			1	230402340
4HP			1	1			1	330402340
4HP			1		1		1	330402341
5HP	1			1		1		130502330
5HP		1		1		1		230502330
5HP			1	1		1		330502330
5HP			1		1	1		330502331
5HP	1			1			1	130502340
5HP		1		1			1	230502340
5HP			1	1			1	330502340
5HP			1		1		1	330502341
6HP	1			1		1		130602330
6HP		1		1		1		230602330
6HP			1	1		1		330602330
6HP			1		1	1		330602331
6HP	1			1			1	130602340
6HP		1		1			1	230602340
6HP			1	1			1	330602340
6HP			1		1		1	330602341
7HP	1			1		1		130702330
7HP		1		1		1		230702330
7HP			1	1		1		330702330
7HP			1		1	1		330702331
7HP	1			1			1	130702340
7HP		1		1			1	230702340
7HP			1	1			1	330702340
7HP			1		1		1	330702341
8HP	1			1		1		130802330
8HP		1		1		1		230802330
8HP			1	1		1		330802330
8HP			1		1	1		330802331
8HP	1			1			1	130802340
8HP		1		1			1	230802340
8HP			1	1			1	330802340
8HP			1		1		1	330802341
10HP	1			1		1		131002330
10HP		1		1		1		231002330
10HP			1	1		1		331002330
10HP			1		1	1		331002331
10HP	1			1			1	131002340
10HP		1		1			1	231002340
10HP			1	1			1	331002340
10HP			1		1		1	331002341
12HP	1			1		1		131202330
12HP		1		1		1		231202330
12HP			1	1		1		331202330
12HP			1		1	1		331202331
12HP	1			1			1	131202340
12HP		1		1			1	231202340
12HP			1	1			1	331202340
12HP			1		1		1	331202341

III Panel component

6U Panel component

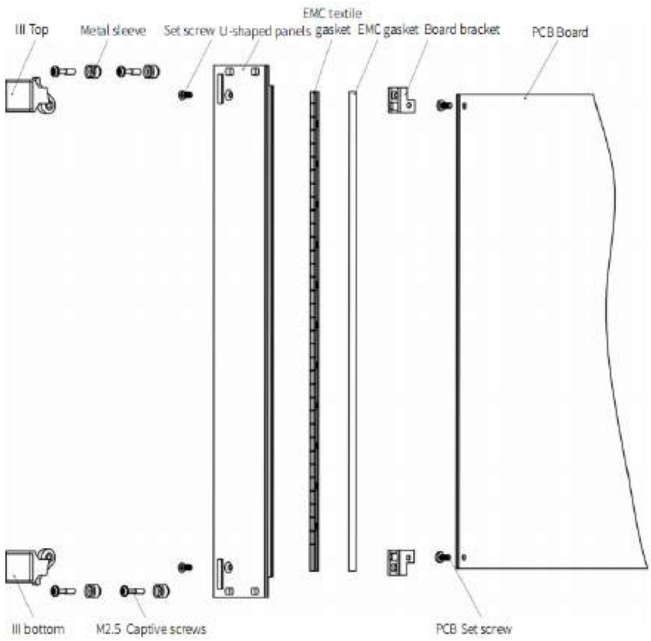

Panel profile

I profile　　II profile　　III profile

Delivery Comprises(kit)

Name	Qty	Order no	Description
III Top	1	1002008	Install in the top panel
III bottom	1	1002008	Install in the bottom panel
Metal sleeve	2	1014002	Plastic
Metal sleeve	2	1014003	Brass
U-shaped panels	1	/	Front anodised rear conductive
Textile gasket	1	1008038	Textile gasket
Captive screws	2	1004023	Cross/captive screws M2.5×12 Stainless steel
Panel fixing screws	2	1004004	Pan head Pozidrive c/sk screw M2.5×6 Stainless steel
EMC gasket	1	1008015	Shielding tape
PCB Set screw	2	1004009	Pan head Pozidrive c/sk screw M2.5×12 Stainless steel
Set screw	2	1004011	Pozidrive c/sk screw Stainless steel

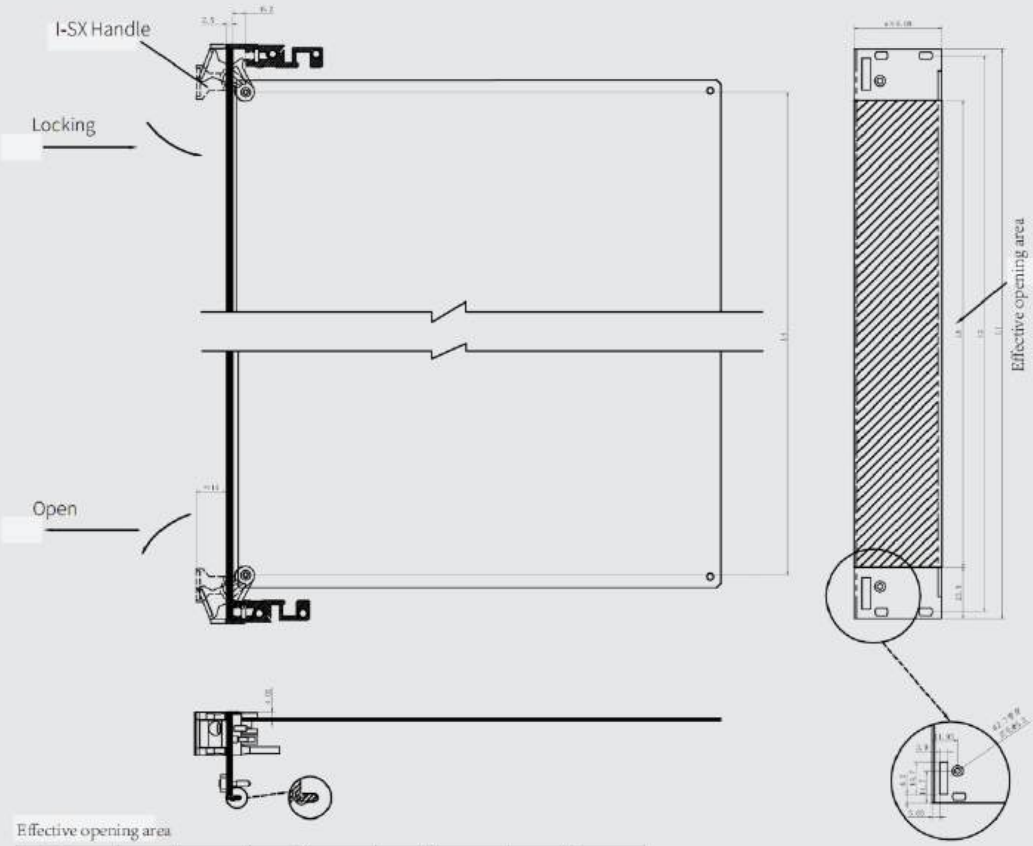

Effective opening area

Height	L1mm	L3mm	L4mm	L5mm
3U	128.7	122.5	88.9	81.7
4U	173.15	166.95	133.35	126.15
6U	262.05	255.85	222.25	215.05
9U	395.4	389.2	355.60	348.4

III Panel component

6U Panel component

III Handle order information

Width	I Panel	II Panel	III Panel	EMCgasket	EMC textile gasket	Grey handle	Black handle	Order no
4HP	1			1		1		160402330
4HP		1		1		1		260402330
4HP			1	1		1		360402330
4HP			1		1	1		360402331
4HP	1			1			1	160402340
4HP		1		1			1	260402340
4HP			1	1			1	360402340
4HP			1		1		1	360402341
5HP	1			1		1		160502330
5HP		1		1		1		260502330
5HP			1	1		1		360502330
5HP			1		1	1		360502331
5HP	1			1			1	160502340
5HP		1		1			1	260502340
5HP			1	1			1	360502340
5HP			1		1		1	360502341
6HP	1			1		1		160602330
6HP		1		1		1		260602330
6HP			1	1		1		360602330
6HP			1		1	1		360602331
6HP	1			1			1	160602340
6HP		1		1			1	260602340
6HP			1	1			1	360602340
6HP			1		1		1	360602341
7HP	1			1		1		160702330
7HP		1		1		1		260702330
7HP			1	1		1		360702330
7HP			1		1	1		360702331
7HP	1			1			1	160702340
7HP		1		1			1	260702340
7HP			1	1			1	360702340
7HP			1		1		1	360702341
8HP	1			1		1		160802330
8HP		1		1		1		260802330
8HP			1	1		1		360802330
8HP			1		1	1		360802331
8HP	1			1			1	160802340
8HP		1		1			1	260802340
8HP			1	1			1	360802340
8HP			1		1		1	360802341
10HP	1			1		1		161002330
10HP		1		1		1		261002330
10HP			1	1		1		361002330
10HP			1		1	1		361002331
10HP	1			1			1	161002340
10HP		1		1			1	261002340
10HP			1	1			1	361002340
10HP			1		1		1	361002341
12HP	1			1		1		161202330
12HP		1		1		1		261202330
12HP			1	1		1		361202330
12HP			1		1	1		361202331
12HP	1			1			1	161202340
12HP		1		1			1	261202340
12HP			1	1			1	361202340
12HP			1		1		1	361202341

V Panel component

3U Panel component

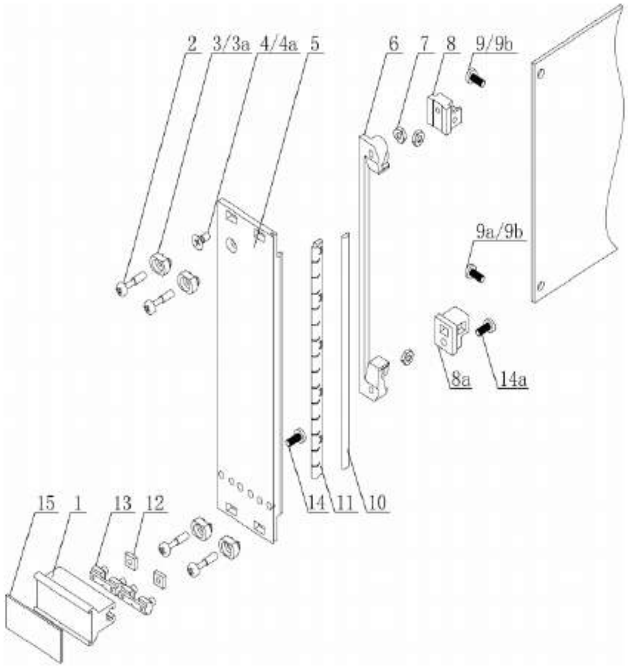

3U PCB Board Installation dimension

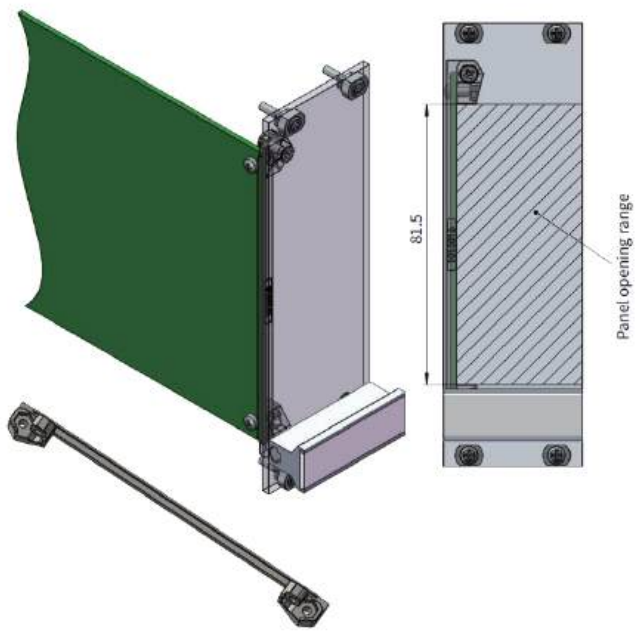

Delivery Comprises(kit)

Item	Name	Qty	Order no	Description
1	V-Handle	1	/	Install in the bottom panel
2	Captive screws	4	1004023	Cross/captive screws M2.5×12 Stainless steel
3	Metal sleeve	4	1014002	Plastic
3a	Metal sleeve	4	1014003	Brass
4	Panel fixing screws	1	1004011	Pozidrive c/sk screw M2.5×6 Stainless steel
4a	Panel fixing screws	1	1004015	Pozidrive c/sk screw M2.5×8 Stainless steel
5	U-shaped panels	1	/	Front anodised rear conductive
6	PCB bracket	1	1015016	PCB bracket, PC+20%GF,Grey, Plastic
7	Hex Nut	3	1005001	Hex Nut, M2.5, Stainless steel
8	Printed board bracket	1	1015001	Die-cast zinc
8a	Printed board bracket	1	1015005	PC+20%GF,Grey, It needs to be used together with one 9a and one 14a
9	PCB Set screw	1	1004004	Pan head Pozidrive c/sk screw M2.5×6 Stainless steel
9a	PCB Set screw	1	1004260	Pan head self-tapping screw M2.5×6 Stainless steel
9b	PCB Set screw	2	1004005	Pan head Pozidrive c/sk screw M2.5×8 Stainless steel
10	EMC textile gasket	1	1008038	EMC textile gasket
11	EMC gasket	1	1008015	EMC gasket
12	Square nut	2	1005002	Square nut, M2.5, Stainless steel
13	Plastic parts	2	1000066	Plastic parts, PC+20%GF,Grey
14	Set screw	1	1004004	Pan head Pozidrive c/sk screw M2.5×6 Stainless steel
14a	Set screw	1	1004005	Pan head Pozidrive c/sk screw M2.5×8 Stainless steel
15	Scutrcheon	1	/	Identification plate,Al,1.5mm

V Panel component

6U Panel component

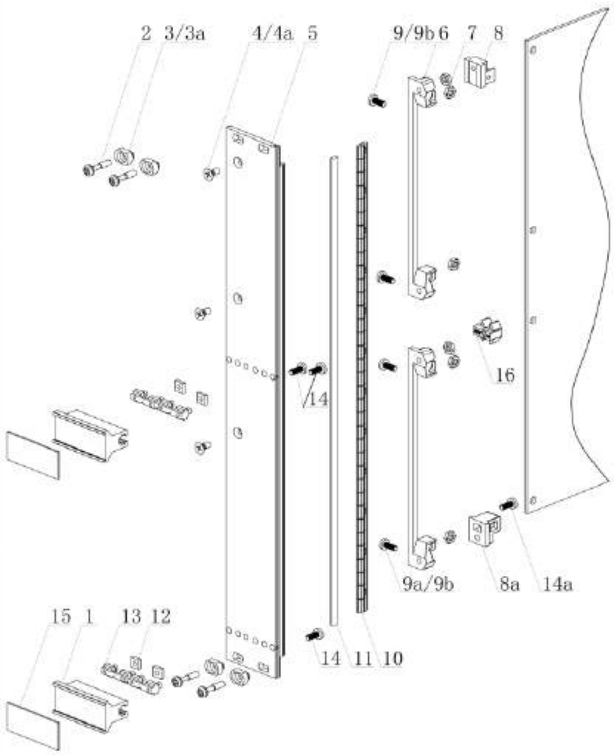

6U PCB Board Installation dimension

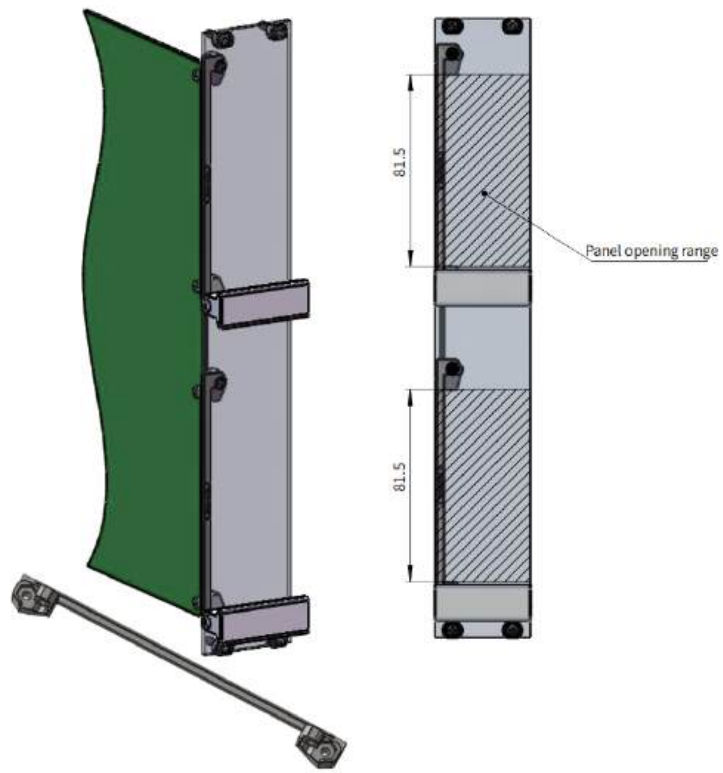

Delivery Comprises(kit)

Item	Name	Qty	Order no	Description
1	V-Handle	2	/	Install in the bottom panel
2	Captive screws	4	1004023	Cross/captive screws M2.5×12 Stainless steel
3	Metal sleeve	4	1014002	Plastic
3a	Metal sleeve	4	1014003	Brass
4	Panel fixing screws	3	1004011	Pozidrive c/sk screw M2.5×6 Stainless steel
4a	Panel fixing screws	3	1004015	Pozidrive c/sk screw M2.5×8 Stainless steel
5	U-shaped panels	1	/	Front anodised rear conductive
6	PCB bracket	2	1015016	PCB bracket, PC+20%GF,Grey, Plastic
7	Hex Nut	6	1005001	Hex Nut, M2.5, Stainless steel
8	Printed board bracket	1	1015001	Die-cast zinc
8a	Printed board bracket	1	1015005	PC+20%GF,Grey, It needs to be used together with one 9a and one 14a
9	PCB Set screw	3	1004004	Pan head Pozidrive c/sk screw M2.5×6 Stainless steel
9a	PCB Set screw	1	1004260	Pan head self-tapping screw M2.5×6 Stainless steel
9b	PCB Set screw	1	1004005	Pan head Pozidrive c/sk screw M2.5×8 Stainless steel
10	EMC textile gasket	1	1008038	EMC textile gasket
11	EMC gasket	1	1008015	EMC gasket
12	Square nut	4	1005002	Square nut, M2.5, Stainless steel
13	Plastic parts	4	1000066	Plastic parts, PC+20%GF,Grey
14	Set screw	3	1004004	Pan head Pozidrive c/sk screw M2.5×6 Stainless steel
14a	Set screw	1	1004005	Pan head Pozidrive c/sk screw M2.5×8 Stainless steel
15	Scutrcheon	2	/	Identification plate,Al,1.5mm
16	PCB Centre support	1	1015015	Centre support for printed boards, PC+20%GF

V Panel component

3U Panel component

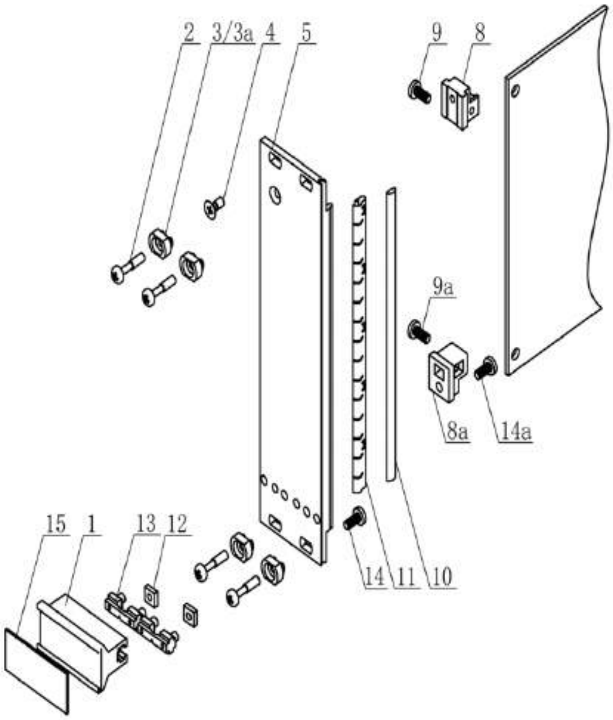

Panel profile

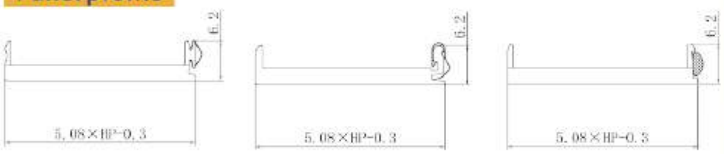

I profile　　II profile　　III profile

Delivery Comprises(kit)

Item	Name	Qty	Order no	Description
1	V-Handle	1	/	Install in the bottom panel
2	Captive screws	4	1004023	Cross/captive screws M2.5×12 Stainless steel
3	Metal sleeve	4	1014002	Plastic
3a	Metal sleeve	4	1014003	Brass
4	Panel fixing screws	1	1004011	Pozidrive c/sk screw M2.5×6 Stainless steel
5	U-shaped panels	1	/	Front anodised rear conductive
8	Printed board bracket	1	1015001	Die-cast zinc
8a	Printed board bracket	1	1015005	PC+20%GF,Grey, It needs to be used together with one 9a and one 14a
9	PCB Set screw	1	1004004	Pan head Pozidrive c/sk screw M2.5×6 Stainless steel
9a	PCB Set screw	1	1004260	Pan head self-tapping screw M2.5×8 Stainless steel
10	EMC textile gasket	1	1008038	EMC textile gasket
11	EMC gasket	1	1008015	EMC gasket
12	Square nut	2	1005002	Square nut, M2.5, Stainless steel
13	Plastic parts	2	1000066	Plastic parts, PC+20%GF,Grey
14	Set screw	1	1004004	Pan head Pozidrive c/sk screw M2.5×6 Stainless steel
14a	Set screw	1	1004005	Pan head Pozidrive c/sk screw M2.5×8 Stainless steel
15	Scutrcheon	1	/	Identification plate, Al, 1.5mm

V Handle order information

Width	I Panel	II Panel	III Panel	Panel	EMCgasket	EMC textile gasket	Grey handle	Order no
4HP	1				1		1	30401011
4HP		1			1		1	30401021
4HP			1			1	1	30401031
4HP				1	1		1	30401041
5HP	1				1		1	30501011
5HP		1			1		1	30501021
5HP			1			1	1	30501031
5HP				1	1		1	30501041
6HP	1				1		1	30601011
6HP		1			1		1	30601021
6HP			1			1	1	30601031
6HP				1	1		1	30601041
7HP	1				1		1	30701011
7HP		1			1		1	30701021
7HP			1			1	1	30701031
7HP				1	1		1	30701041
8HP	1				1		1	30801011
8HP		1			1		1	30801021
8HP			1			1	1	30801031
8HP				1	1		1	30801041
10HP	1				1		1	31001011
10HP		1			1		1	31001021
10HP			1			1	1	31001031
10HP				1	1		1	31001041
12HP	1				1		1	31201011
12HP		1			1		1	31201021
12HP			1			1	1	31201031
12HP				1	1		1	31201041

V Panel component

6U Panel component

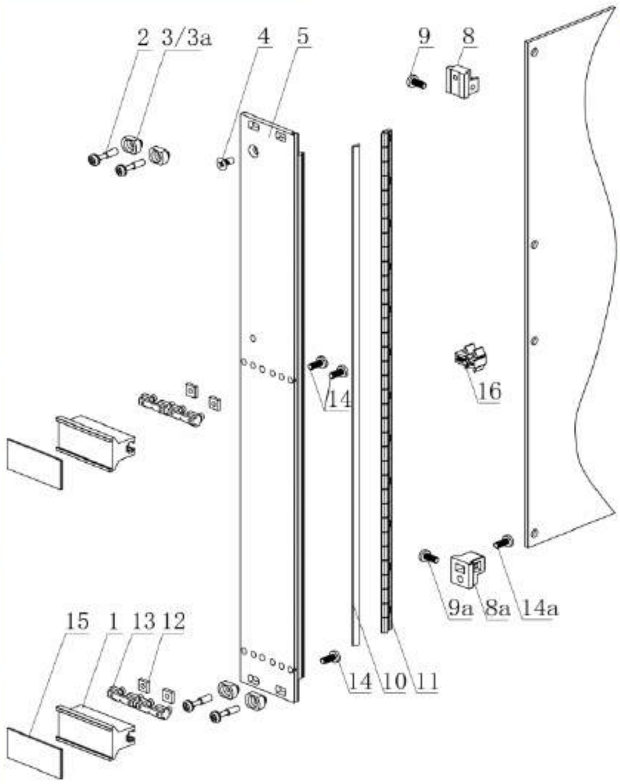

Panel profile

I profile　　II profile　　III profile

Delivery Comprises(kit)

Item	Name	Qty	Order no	Description
1	V-Handle	2	/	Install in the bottom panel
2	Captive screws	4	1004023	Cross/captive screws M2.5×12 Stainless steel
3	Metal sleeve	4	1014002	Plastic
3a	Metal sleeve	4	1014003	Brass
4	Panel fixing screws	2	1004011	Pozidrive c/sk screw M2.5×6 Stainless steel
5	U-shaped panels	1	/	Front anodised rear conductive
8	Printed board bracket	1	1015001	Die-cast zinc
8a	Printed board bracket	1	1015005	PC+20%GF,Grey, It needs to be used together with one 9a and one 14a
9	PCB Set screw	1	1004004	Pan head Pozidrive c/sk screw M2.5×6 Stainless steel
9a	PCB Set screw	1	1004260	Pan head self-tapping screw M2.5×8 Stainless steel
10	EMC textile gasket	1	1008038	EMC textile gasket
11	EMC gasket	1	1008015	EMC gasket
12	Square nut	4	1005002	Square nut,M2.5, Stainless steel
13	Plastic parts	4	1000066	Plastic parts, PC+20%GF,Grey
14	Set screw	3	1004004	Pan head Pozidrive c/sk screw M2.5×6 Stainless steel
14a	Set screw	1	1004005	Pan head Pozidrive c/sk screw M2.5×8 Stainless steel
15	Scutcheon	2	/	Identification plate,Al,1.5mm
16	PCB Centre support	1	1015015	Centre support for printed boards, PC+20%GF

V Handle order information

Width	I Panel	II Panel	III Panel	Panel	EMCgasket	EMC textile gasket	Grey handle	Order no
4HP	1				1		1	60401011
4HP		1			1		1	60401021
4HP			1			1	1	60401031
4HP				1	1		1	60401041
5HP	1				1		1	60501011
5HP		1			1		1	60501021
5HP			1			1	1	60501031
5HP				1	1		1	60501041
6HP	1				1		1	60601011
6HP		1			1		1	60601021
6HP			1			1	1	60601031
6HP				1	1		1	60601041
7HP	1				1		1	60701011
7HP		1			1		1	60701021
7HP			1			1	1	60701031
7HP				1	1		1	60701041
8HP	1				1		1	60801011
8HP		1			1		1	60801021
8HP			1			1	1	60801031
8HP				1	1		1	60801041
10HP	1				1		1	61001011
10HP		1			1		1	61001021
10HP			1			1	1	61001031
10HP				1	1		1	61001041
12HP	1				1		1	61201011
12HP		1			1		1	61201021
12HP			1			1	1	61201031
12HP				1	1		1	61201041

V Panel component

3U Panel component

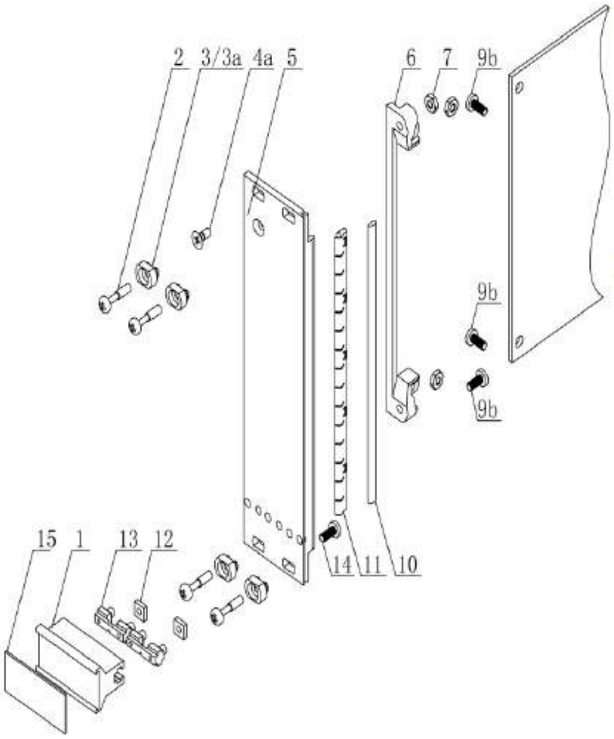

Panel profile

I profile　　II profile　　III profile

Delivery Comprises(kit)

Item	Name	Qty	Order no	Description
1	V-Handle	1	/	Install in the bottom panel
2	Captive screws	4	1004023	Cross/captive screws M2.5×12 Stainless steel
3	Metal sleeve	4	1014002	Plastic
3a	Metal sleeve	4	1014003	Brass
4a	Panel fixing screws	1	1004015	Pozidrive c/sk screw M2.5×8 Stainless steel
5	U-shaped panels	1	/	Front anodised rear conductive
6	PCB bracket	1	1015016	PCB bracket, PC+20%GF,Grey, Plastic
7	Hex Nut	3	1005001	Hex Nut, M2.5, Stainless steel
9b	PCB Set screw	3	1004005	Pan head Pozidrive c/sk screw M2.5×8 Stainless steel
10	EMC textile gasket	1	1008038	EMC textile gasket
11	EMCgasket	1	1008015	EMC gasket
12	Square nut	2	1005002	Square nut, M2.5, Stainless steel
13	Plastic parts	2	1000066	Plastic parts, PC+20%GF,Grey
14	Set screw	1	1004004	Pan head Pozidrive c/sk screw M2.5×6 Stainless steel
15	Scutrcheon	1	/	Identification plate,Al,1.5mm

V Handle order information

Width	I Panel	II Panel	III Panel	Panel	EMCgasket	EMC textile gasket	Grey handle	Order no
4HP	1				1		1	30401012
4HP		1			1		1	30401022
4HP			1			1	1	30401032
4HP				1	1		1	30401042
5HP	1				1		1	30501012
5HP		1			1		1	30501022
5HP			1			1	1	30501032
5HP				1	1		1	30501042
6HP	1				1		1	30601012
6HP		1			1		1	30601022
6HP			1			1	1	30601032
6HP				1	1		1	30601042
7HP	1				1		1	30701012
7HP		1			1		1	30701022
7HP			1			1	1	30701032
7HP				1	1		1	30701042
8HP	1				1		1	30801012
8HP		1			1		1	30801022
8HP			1			1	1	30801032
8HP				1	1		1	30801042
10HP	1				1		1	31001012
10HP		1			1		1	31001022
10HP			1			1	1	31001032
10HP				1	1		1	31001042
12HP	1				1		1	31201012
12HP		1			1		1	31201022
12HP			1			1	1	31201032
12HP				1	1		1	31201042

V Panel component

6U Panel component

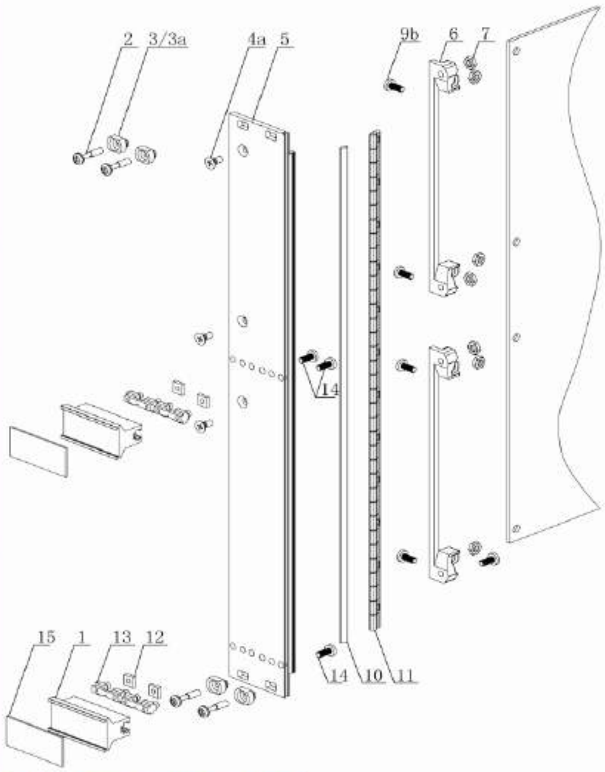

Panel profile

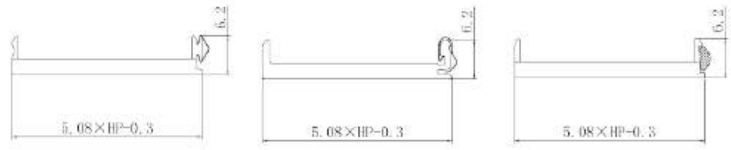

I profile II profile III profile

Delivery Comprises(kit)

Item	Name	Qty	Order no	Description
1	V-Handle	2	/	Install in the bottom panel
2	Captive screws	4	1004023	Cross/captive screws M2.5×12 Stainless steel
3	Metal sleeve	4	1014002	Plastic
3a	Metal sleeve	4	1014003	Brass
4a	Panel fixing screws	1	1004015	Pozidrive c/sk screw M2.5×8 Stainless steel
5	U-shaped panels	1	/	Front anodised rear conductive
6	PCB bracket	2	1015016	PCB bracket, PC+20%GF,Grey, Plastic
7	Hex Nut	7	1005001	Hex Nut, M2.5, Stainless steel
9b	PCB Set screw	5	1004005	Pan head Pozidrive c/sk screw M2.5×8 Stainless steel
10	EMC textile gasket	1	1008038	EMC textile gasket
11	EMCgasket	1	1008015	EMC gasket
12	Square nut	4	1005002	Square nut, M2.5, Stainless steel
13	Plastic parts	4	1000066	Plastic parts, PC+20%GF,Grey
14	Set screw	3	1004004	Pan head Pozidrive c/sk screw M2.5×6 Stainless steel
15	Scutrcheon	2	/	Identification plate,Al,1.5mm

V Handle order information

Width	I Panel	II Panel	III Panel	Panel	EMCgasket	EMC textile gasket	Grey handle	Order no
4HP	1				1		1	60401012
4HP		1			1		1	60401022
4HP			1			1	1	60401032
4HP				1	1		1	60401042
5HP	1				1		1	60501012
5HP		1			1		1	60501022
5HP			1			1	1	60501032
5HP				1	1		1	60501042
6HP	1				1		1	60601012
6HP		1			1		1	60601022
6HP			1			1	1	60601032
6HP				1	1		1	60601042
7HP	1				1		1	60701012
7HP		1			1		1	60701022
7HP			1			1	1	60701032
7HP				1	1		1	60701042
8HP	1				1		1	60801012
8HP		1			1		1	60801022
8HP			1			1	1	60801032
8HP				1	1		1	60801042
10HP	1				1		1	61001012
10HP		1			1		1	61001022
10HP			1			1	1	61001032
10HP				1	1		1	61001042
12HP	1				1		1	61201012
12HP		1			1		1	61201022
12HP			1			1	1	61201032
12HP				1	1		1	61201042

VI Panel component

3U Panel component

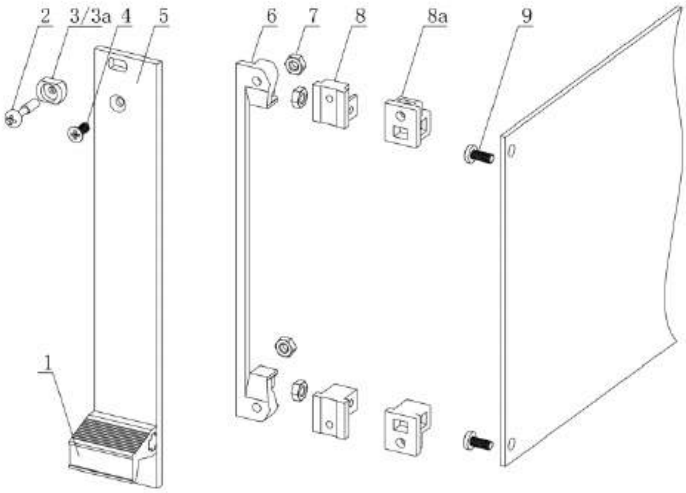

3U PCB Board Installation dimension

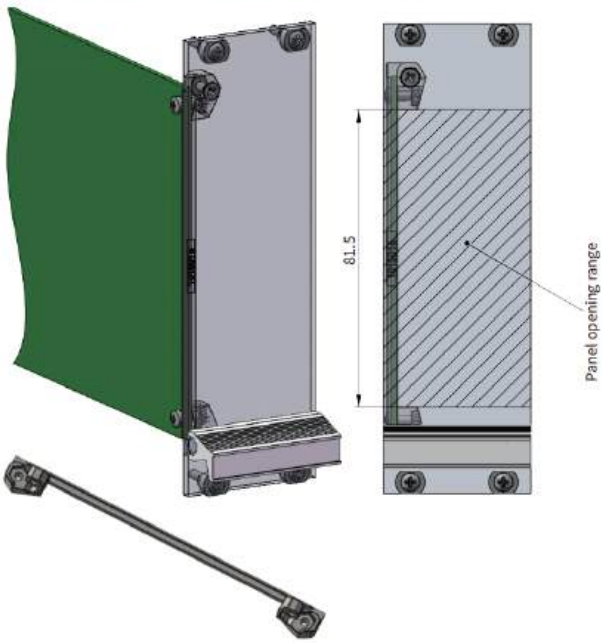

Delivery Comprises(kit)

Item	Name	Qty	Order no	Description
1	VI-Handle	1	/	Install in the bottom panel
2	Captive screws	1	1004023	Cross/captive screws M2.5×12 Stainless steel
3	Metal sleeve	1	1014002	Plastic
3a	Metal sleeve	1	1014003	Brass
4	Panel fixing screws	1	1004011	Pozidrive c/sk screw M2.5×6 Stainless steel
5	U-shaped panels	1	/	Front anodised rear conductive
6	PCB bracket	1	1015016	PCB bracket, PC+20%GF,Grey, Plastic
7	Hex Nut	4	1005001	Hex Nut, M2.5, Stainless steel
8	Printed board bracket	1	1015001	Printed board bracket,Die-cast zinc
8a	Printed board bracket	1	1015005	Printed board bracket,PC+20%GF,
9	PCB Set screw	2	1004004	Pan head Pozidrive c/sk screw M2.5×6 Stainless steel

VI Panel component

3U Panel component

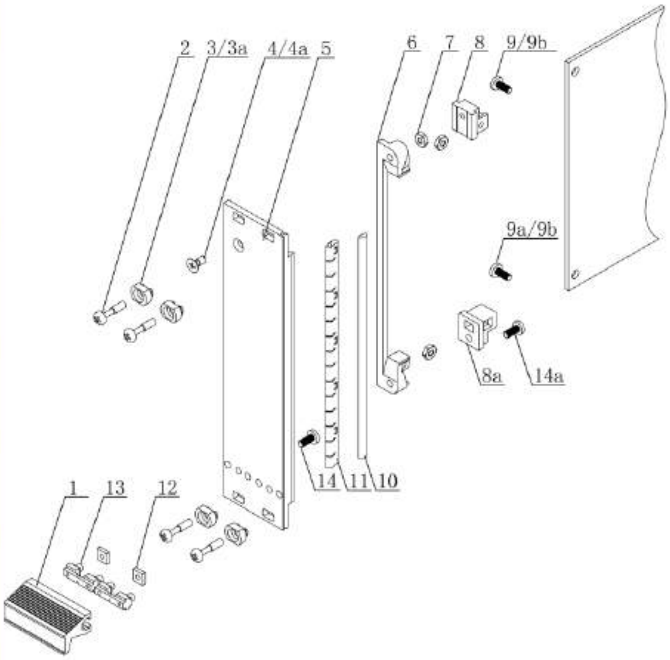

3U PCB Board Installation dimension

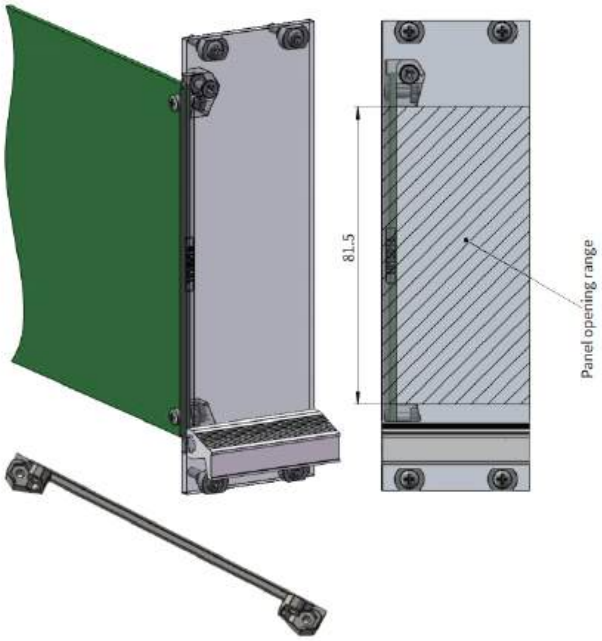

Delivery Comprises(kit)

Item	Name	Qty	Order no	Description
1	VI-Handle	1	/	Install in the bottom panel
2	Captive screws	4	1004023	Cross/captive screws M2.5×12 Stainless steel
3	Metal sleeve	4	1014002	Plastic
3a	Metal sleeve	4	1014003	Brass
4	Panel fixing screws	1	1004011	Pozidrive c/sk screw M2.5×6 Stainless steel
4a	Panel fixing screws	1	1004015	Pozidrive c/sk screw M2.5×8 Stainless steel
5	U-shaped panels	1	/	Front anodised rear conductive
6	PCB bracket	1	1015016	PCB bracket, PC+20%GF,Grey, Plastic
7	Hex Nut	3	1005001	Hex Nut, M2.5, Stainless steel
8	Printed board bracket	1	1015001	Printed board bracket,Die-cast zinc
8a	Printed board bracket	1	1015005	PC+20%GF,Grey, It needs to be used together with one 9a and one 14a
9	PCB Set screw	1	1004004	Pan head Pozidrive c/sk screw M2.5×6 Stainless steel
9a	PCB Set screw	1	1004260	Pan head self-tapping screw M2.5×6 Stainless steel
9b	PCB Set screw	2	1004005	Pan head Pozidrive c/sk screw M2.5×8 Stainless steel
10	EMC textile gasket	1	1008038	EMC textile gasket
11	EMC gasket	1	1008015	EMC gasket
12	Square nut	2	1005002	Square nut, M2.5, Stainless steel
13	Plastic parts	2	1000066	Plastic parts, PC+20%GF,Grey
14	Set screw	1	1004004	Pan head Pozidrive c/sk screw M2.5×6 Stainless steel
14a	Set screw	1	1004005	Pan head Pozidrive c/sk screw M2.5×8 Stainless steel

VI Panel component

6U Panel component

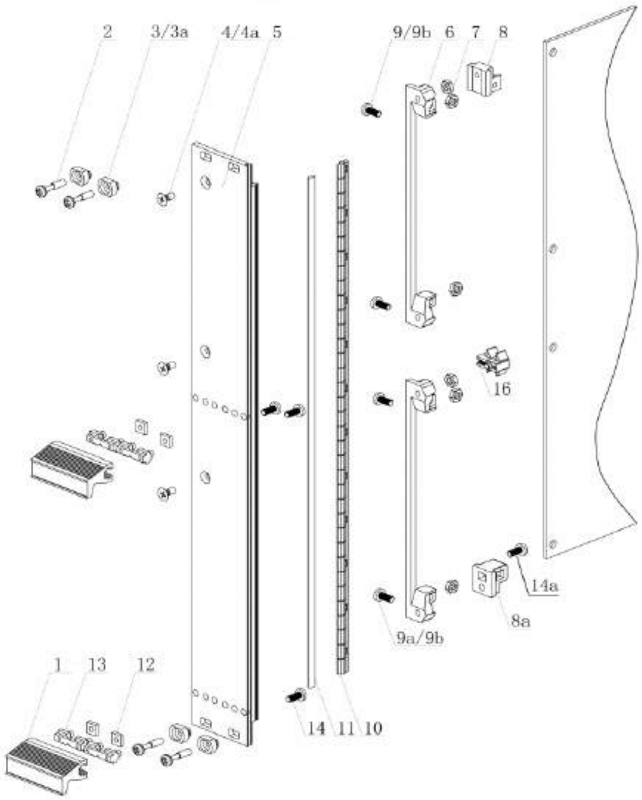

6U PCB Board Installation dimension

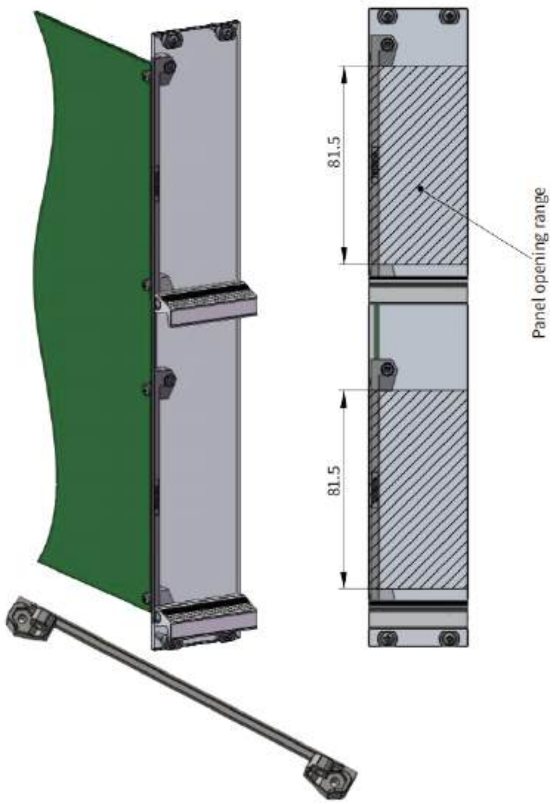

Delivery Comprises(kit)

Item	Name	Qty	Order no	Description
1	VI-Handle	2	/	Install in the bottom panel
2	Captive screws	4	1004023	Cross/captive screws M2.5×12 Stainless steel
3	Metal sleeve	4	1014002	Plastic
3a	Metal sleeve	4	1014003	Brass
4	Panel fixing screws	3	1004011	Pozidrive c/sk screw M2.5×6 Stainless steel
4a	Panel fixing screws	3	1004015	Pozidrive c/sk screw M2.5×8 Stainless steel
5	U-shaped panels	1	/	Front anodised rear conductive
6	PCB bracket	2	1015016	PCB bracket, PC+20%GF,Grey, Plastic
7	Hex Nut	6	1005001	Hex Nut, M2.5, Stainless steel
8	Printed board bracket	1	1015001	Die-cast zinc
8a	Printed board bracket	1	1015005	PC+20%GF,Grey, It needs to be used together with one 9a and one 14a
9	PCB Set screw	3	1004004	Pan head Pozidrive c/sk screw M2.5×6 Stainless steel
9a	PCB Set screw	1	1004260	Pan head self-tapping screw M2.5×6 Stainless steel
9b	PCB Set screw	1	1004005	Pan head Pozidrive c/sk screw M2.5×8 Stainless steel
10	EMC textile gasket	1	1008038	EMC textile gasket
11	EMC gasket	1	1008015	EMC gasket
12	Square nut	4	1005002	Square nut, M2.5, Stainless steel
13	Plastic parts	4	1000066	Plastic parts, PC+20%GF,Grey
14	Set screw	3	1004004	Pan head Pozidrive c/sk screw M2.5×6 Stainless steel
14a	Set screw	1	1004005	Pan head Pozidrive c/sk screw M2.5×8 Stainless steel
16	PCB Centre support	1	1015015	Centre support for printed boards, PC+20%GF

VI Panel component

3U Panel component

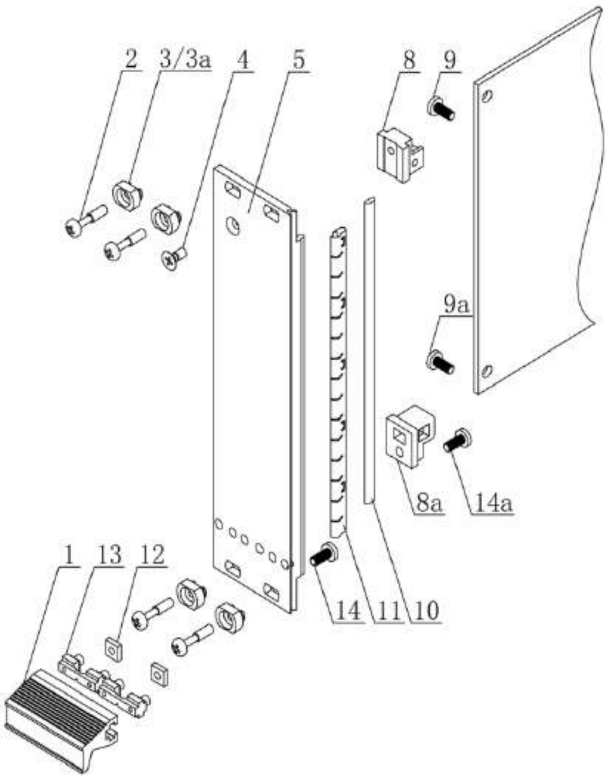

Panel profile

I Profile II Profile III Profile

Delivery Comprises(kit)

Item	Name	Qty	Order no	Description
1	V-Handle	1	/	Install in the bottom panel
2	Captive screws	4	1004023	Cross/captive screws M2.5×12 Stainless steel
3	Metal sleeve	4	1014002	Plastic
3a	Metal sleeve	4	1014003	Brass
4	Panel fixing screws	1	1004011	Pozidrive c/sk screw M2.5×6 Stainless steel
5	U-shaped panels	1	/	Front anodised rear conductive
8	Printed board bracket	1	1015001	Die-cast zinc
8a	Printed board bracket	1	1015005	PC+20%GF,Grey, It needs to be used together with one 9a and one 14a
9	PCB Set screw	2	1004004	Pan head Pozidrive c/sk screw M2.5×6 Stainless steel
9a	PCB Set screw	2	1004260	Pan head self-tapping screw M2.5×8 Stainless steel
10	EMC textile gasket	1	1008038	EMC textile gasket
11	EMC gasket	1	1008015	EMC gasket
12	Square nut	2	1005002	Square nut, M2.5, Stainless steel
13	Plastic parts	2	1000066	Plastic parts, PC+20%GF,Grey
14	Set screw	2	1004004	Pan head Pozidrive c/sk screw M2.5×6 Stainless steel
14a	Set screw	2	1004005	Pan head Pozidrive c/sk screw M2.5×8 Stainless steel

VI Handle order information

Width	I Panel	II Panel	III Panel	Panel	EMCgasket	EMC textile gasket	Grey handle	Order no
4HP	1				1		1	30402011
4HP		1			1		1	30402021
4HP			1			1	1	30402031
4HP				1	1		1	30402041
5HP	1				1		1	30502011
5HP		1			1		1	30502021
5HP			1			1	1	30502031
5HP				1	1		1	30502041
6HP	1				1		1	30602011
6HP		1			1		1	30602021
6HP			1			1	1	30602031
6HP				1	1		1	30602041
7HP	1				1		1	30702011
7HP		1			1		1	30702021
7HP			1			1	1	30702031
7HP				1	1		1	30702041
8HP	1				1		1	30802011
8HP		1			1		1	30802021
8HP			1			1	1	30802031
8HP				1	1		1	30802041
10HP	1				1		1	31002011
10HP		1			1		1	31002021
10HP			1			1	1	31002031
10HP				1	1		1	31002041
12HP	1				1		1	31202011
12HP		1			1		1	31202021
12HP			1			1	1	31202031
12HP				1	1		1	31202041

VI Panel component

6U Panel component

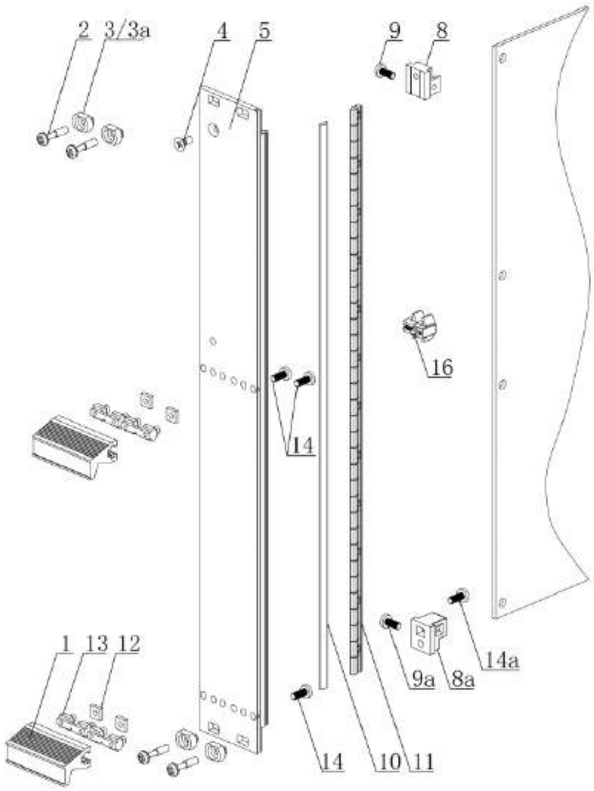

Panel profile

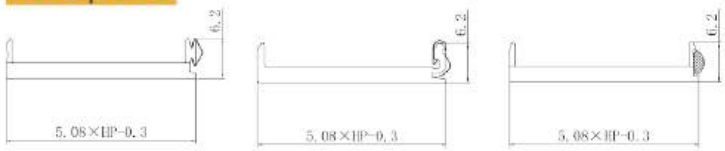

I Profile II Profile III Profile

Delivery Comprises(kit)

Item	Name	Qty	Order no	Description
1	V-Handle	2	/	Install in the bottom panel
2	Captive screws	4	1004023	Cross/captive screws M2.5×12 Stainless steel
3	Metal sleeve	4	1014002	Plastic
3a	Metal sleeve	4	1014003	Brass
4	Panel fixing screws	1	1004011	Pozidrive c/sk screw M2.5×6 Stainless steel
5	U-shaped panels	1	/	Front anodised rear conductive
8	Printed board bracket	1	1015001	Die-cast zinc
8a	Printed board bracket	1	1015005	PC+20%GF,Grey, It needs to be used together with one 9a and one 14a
9	PCB Set screw	1	1004004	Pan head Pozidrive c/sk screw M2.5×6 Stainless steel
9a	PCB Set screw	1	1004260	Pan head self-tapping screw M2.5×8 Stainless steel
10	EMC textile gasket	1	1008038	EMC textile gasket
11	EMC gasket	1	1008015	EMC gasket
12	Square nut	4	1005002	Square nut, M2.5, Stainless steel
13	Plastic parts	4	1000066	Plastic parts, PC+20%GF,Grey
14	Set screw	3	1004004	Pan head Pozidrive c/sk screw M2.5×6 Stainless steel
14a	Set screw	1	1004005	Pan head Pozidrive c/sk screw M2.5×8 Stainless steel
16	PCB Centre support	1	1015015	Centre support for printed boards, PC+20%GF

VI Handle order information

Width	I Panel	II Panel	III Panel	Panel	EMCgasket	EMC textile gasket	Grey handle	Order no
4HP	1				1		1	60402011
4HP		1			1		1	60402021
4HP			1			1	1	60402031
4HP				1	1		1	60402041
5HP	1				1		1	60502011
5HP		1			1		1	60502021
5HP			1			1	1	60502031
5HP				1	1		1	60502041
6HP	1				1		1	60602011
6HP		1			1		1	60602021
6HP			1			1	1	60602031
6HP				1	1		1	60602041
7HP	1				1		1	60702011
7HP		1			1		1	60702021
7HP			1			1	1	60702031
7HP				1	1		1	60702041
8HP	1				1		1	60802011
8HP		1			1		1	60802021
8HP			1			1	1	60802031
8HP				1	1		1	60802041
10HP	1				1		1	61002011
10HP		1			1		1	61002021
10HP			1			1	1	61002031
10HP				1	1		1	61002041
12HP	1				1		1	61202011
12HP		1			1		1	61202021
12HP			1			1	1	61202031
12HP				1	1		1	61202041

VI Panel component

瑞德科诺 RDEKON

3U Panel component

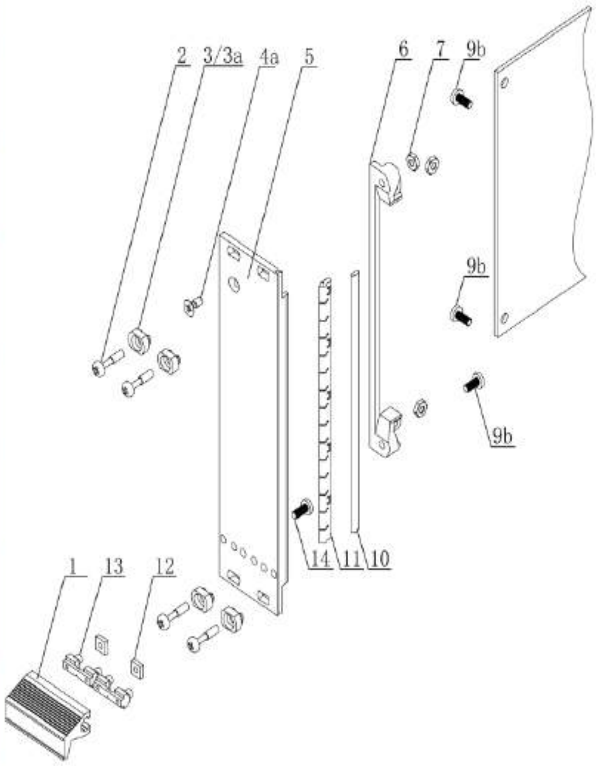

Panel profile

I Profile　　II Profile　　III Profile

Delivery Comprises(kit)

Item	Name	Qty	Order no	Description
1	V-Handle	1	/	Install in the bottom panel
2	Captive screws	4	1004023	Cross/captive screws M2.5×12 Stainless steel
3	Metal sleeve	4	1014002	Plastic
3a	Metal sleeve	4	1014003	Brass
4a	Panel fixing screws	1	1004015	Pozidrive c/sk screw M2.5×8 Stainless steel
5	U-shaped panels	1	/	Front anodised rear conductive
6	PCB bracket	1	1015016	PCB bracket, PC+20%GF,Grey, Plastic
7	Hex Nut	3	1005001	Hex Nut, M2.5, Stainless steel
9b	PCB Set screw	3	1004005	Pan head Pozidrive c/sk screw M2.5×8 Stainless steel
10	EMC textile gasket	1	1008038	EMC textile gasket
11	EMC gasket	1	1008015	EMC gasket
12	Square nut	2	1005002	Square nut, M2.5, Stainless steel
13	Plastic parts	2	1000066	Plastic parts, PC+20%GF,Grey
14	Set screw	1	1004004	Pan head Pozidrive c/sk screw M2.5×6 Stainless steel

VI Handle order information

Width	I Panel	II Panel	III Panel	Panel	EMCgasket	EMC textile gasket	Grey handle	Order no
4HP	1				1		1	30402012
4HP		1			1		1	30402022
4HP			1			1	1	30402032
4HP				1	1		1	30402042
5HP	1				1		1	30502012
5HP		1			1		1	30502022
5HP			1			1	1	30502032
5HP				1	1		1	30502042
6HP	1				1		1	30602012
6HP		1			1		1	30602022
6HP			1			1	1	30602032
6HP				1	1		1	30602042
7HP	1				1		1	30702012
7HP		1			1		1	30702022
7HP			1			1	1	30702032
7HP				1	1		1	30702042
8HP	1				1		1	30802012
8HP		1			1		1	30802022
8HP			1			1	1	30802032
8HP				1	1		1	30802042
10HP	1				1		1	31002012
10HP		1			1		1	31002022
10HP			1			1	1	31002032
10HP				1	1		1	31002042
12HP	1				1		1	31202012
12HP		1			1		1	31202022
12HP			1			1	1	31202032
12HP				1	1		1	31202042

VI Panel component

6U Panel component

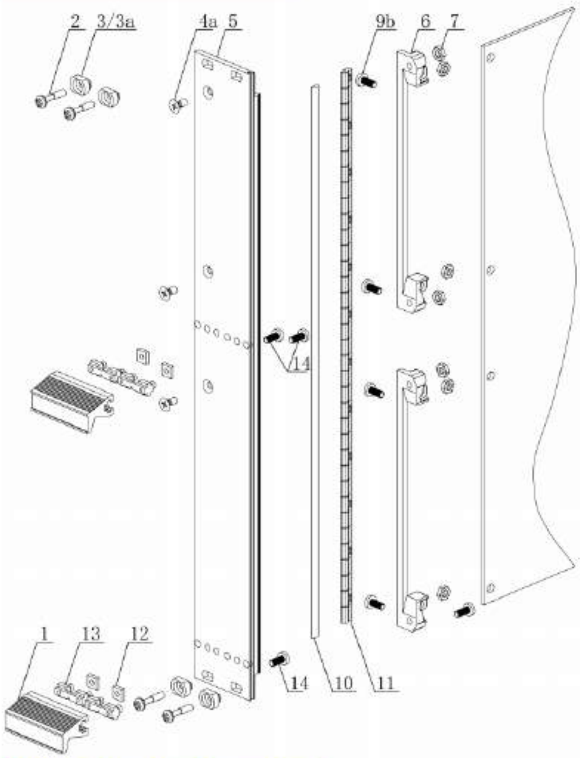

Panel profile

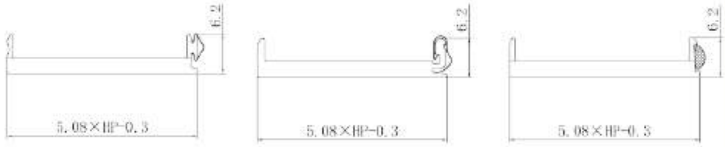

I Profile　　II Profile　　III Profile

Delivery Comprises(kit)

Item	Name	Qty	Order no	Description
1	V-Handle	2	/	Install in the bottom panel
2	Captive screws	4	1004023	Cross/captive screws M2.5×12 Stainless steel
3	Metal sleeve	4	1014002	Plastic
3a	Metal sleeve	4	1014003	Brass
4a	Panel fixing screws	3	1004015	Pozidrive c/sk screw M2.5×8 Stainless steel
5	U-shaped panels	1	/	Front anodised rear conductive
6	PCB bracket	2	1015016	PCB bracket, PC+20%GF, Grey, Plastic
7	Hex Nut	7	1005001	Hex Nut, M2.5, Stainless steel
9b	PCB Set screw	5	1004005	Pan head Pozidrive c/sk screw M2.5×8 Stainless steel
10	EMC textile gasket	1	1008038	EMC textile gasket
11	EMC gasket	1	1008015	EMC gasket
12	Square nut	4	1005002	Square nut, M2.5, Stainless steel
13	Plastic parts	4	1000066	Plastic parts, PC+20%GF, Grey
14	Set screw	4	1004004	Pan head Pozidrive c/sk screw M2.5×6 Stainless steel

VI Handle order information

Width	I Panel	II Panel	III Panel	Panel	EMCgasket	EMC textile gasket	Grey handle	Order no
4HP	1				1		1	60402012
4HP		1			1		1	60402022
4HP			1			1	1	60402032
4HP				1	1		1	60402042
5HP	1				1		1	60502012
5HP		1			1		1	60502022
5HP			1			1	1	60502032
5HP				1	1		1	60502042
6HP	1				1		1	60602012
6HP		1			1		1	60602022
6HP			1			1	1	60602032
6HP				1	1		1	60602042
7HP	1				1		1	60702012
7HP		1			1		1	60702022
7HP			1			1	1	60702032
7HP				1	1		1	60702042
8HP	1				1		1	60802012
8HP		1			1		1	60802022
8HP			1			1	1	60802032
8HP				1	1		1	60802042
10HP	1				1		1	61002012
10HP		1			1		1	61002022
10HP			1			1	1	61002032
10HP				1	1		1	61002042
12HP	1				1		1	61202012
12HP		1			1		1	61202022
12HP			1			1	1	61202032
12HP				1	1		1	61202042

T01 Panel component

3U Panel component

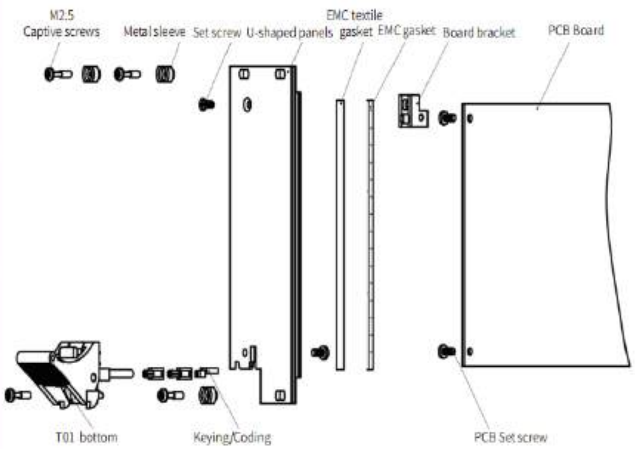

Panel profile

I Profile II Profile III Profile

Delivery Comprises(kit)

Name	Qty	Order no	Description
T01 Bottom	1	1002013	Install in the bottom panel
Metal sleeve	3	1014002	Plastic
Metal sleeve	3	1014003	Brass
U-shaped panels	1	/	Front anodised rear conductive
EMC textile gasket	1	1008038	EMC textile gasket
Captive screws	4	1004023	Cross/captive screws M2.5×12 Stainless steel
Keying/Coding	3	1009010	Plastic
EMC gasket	1	1008015	EMC gasket
PCB Set screw	3	1004004	Pan head Pozidrive c/sk screw M2.5×6 Stainless steel
Set screw	1	1004011	Pan head Pozidrive c/sk screw M2.5×6 Stainless steel
Printed board bracket	1	1015004	Printed board bracket, Die-cast zinc

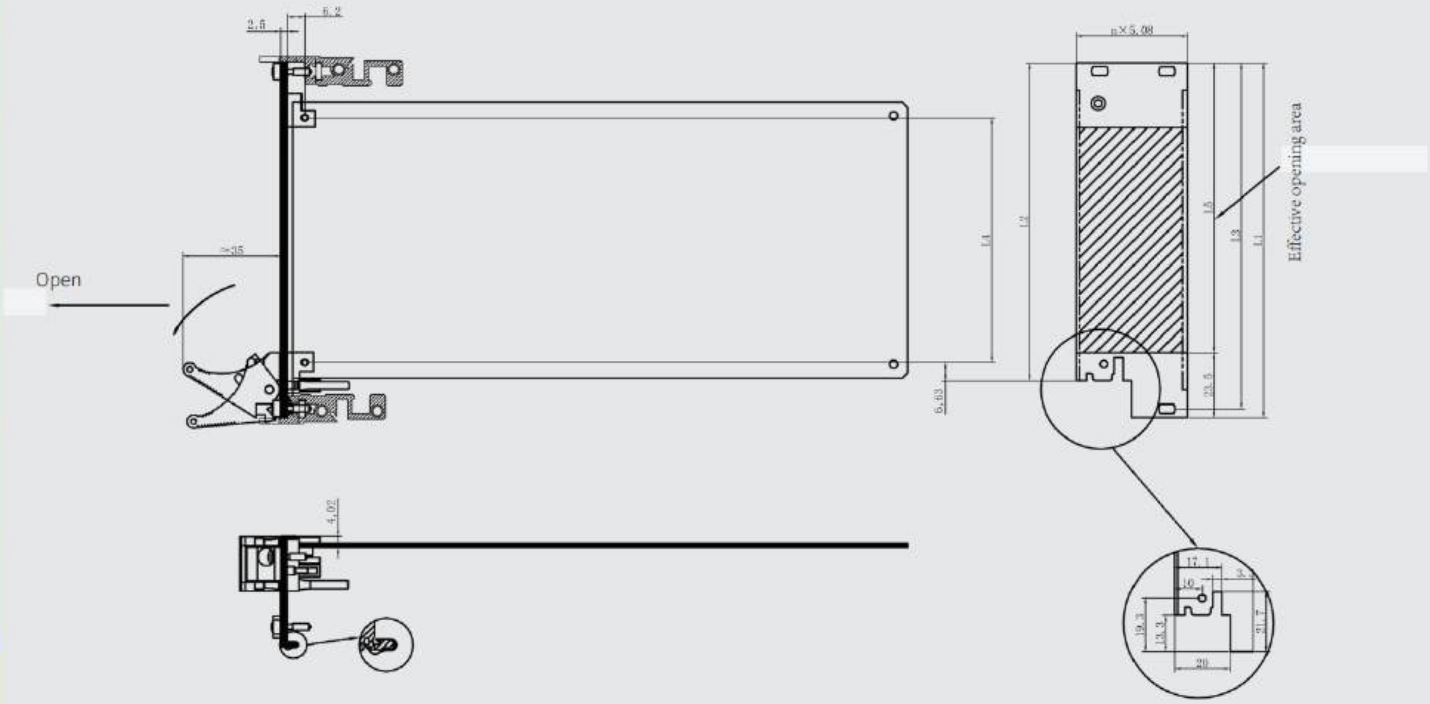

Effective opening area

Height	L1mm	L2mm	L3mm	L4mm	L5mm
3U	128.7	115.4	122.5	88.9	81.7
4U	173.15	159.85	166.95	133.35	126.15
6U	262.05	248.75	255.85	222.25	215.05
9U	395.4	382.1	389.2	355.6	348.4

T01 Panel component

3U Panel component

T01 Handle order information

Width	I Panel	II Panel	III Panel	EMC gasket	EMC textile gasket	Black handle	Grey handle	Order no
4HP	1			1		1		130400100
4HP		1		1		1		230400100
4HP			1	1		1		330400100
4HP			1		1	1		330400101
4HP	1			1			1	130400110
4HP		1		1			1	230400110
4HP			1	1			1	330400110
4HP			1		1		1	330400111
5HP	1			1		1		130500100
5HP		1		1		1		230500100
5HP			1	1		1		330500100
5HP			1		1	1		330500101
5HP	1			1			1	130500110
5HP		1		1			1	220500110
5HP			1	1			1	330500110
5HP			1		1		1	330500111
6HP	1			1		1		130600100
6HP		1		1		1		230600100
6HP			1	1		1		330600100
6HP			1		1	1		330600101
6HP	1			1			1	130600110
6HP		1		1			1	230600110
6HP			1	1			1	330600110
6HP			1		1		1	330600111
7HP	1			1		1		130700100
7HP		1		1		1		230700100
7HP			1	1		1		330700100
7HP			1		1	1		330700101
7HP	1			1			1	130700110
7HP		1		1			1	230700110
7HP			1	1			1	330700110
7HP			1		1		1	330700111
8HP	1			1		1		130800100
8HP		1		1		1		230800100
8HP			1	1		1		330800100
8HP			1		1	1		330800101
8HP	1			1			1	130800110
8HP		1		1			1	230800110
8HP			1	1			1	330800110
8HP			1		1		1	330800111
10HP	1			1		1		131000100
10HP		1		1		1		231000100
10HP			1	1		1		331000100
10HP			1		1	1		331000101
10HP	1			1			1	131000110
10HP		1		1			1	231000110
10HP			1	1			1	331000110
10HP			1		1		1	331000111
12HP	1			1		1		131200100
12HP		1		1		1		231200100
12HP			1	1		1		331200100
12HP			1		1	1		331200101
12HP	1			1			1	131200110
12HP		1		1			1	231200110
12HP			1	1			1	331200110
12HP			1		1		1	331200111

T01 Panel component

3U Panel component

T01 Offset Handle order information

Width	I Panel	II Panel	III Panel	EMC gasket	EMC textile gasket	Black handle	Grey handle	Order no
4HP	1			1		1		130410100
4HP		1		1		1		230410100
4HP			1	1		1		330410100
4HP			1		1	1		330410101
4HP	1			1			1	130410110
4HP		1		1			1	230410110
4HP			1	1			1	330410110
4HP			1		1		1	330410111
5HP	1			1		1		130510100
5HP		1		1		1		230510100
5HP			1	1		1		330510100
5HP			1		1	1		330510101
5HP	1			1			1	130510110
5HP		1		1			1	230510110
5HP			1	1			1	330510110
5HP			1		1		1	330510111
6HP	1			1		1		130610100
6HP		1		1		1		230610100
6HP			1	1		1		330610100
6HP			1		1	1		330610101
6HP	1			1			1	130610110
6HP		1		1			1	230610110
6HP			1	1			1	330610110
6HP			1		1		1	330610111
7HP	1			1		1		130710100
7HP		1		1		1		230710100
7HP			1	1		1		330710100
7HP			1		1	1		330710101
7HP	1			1			1	130710110
7HP		1		1			1	230710110
7HP			1	1			1	330710110
7HP			1		1		1	330710111
8HP	1			1		1		130810100
8HP		1		1		1		230810100
8HP			1	1		1		330810100
8HP			1		1	1		330810101
8HP	1			1			1	130810110
8HP		1		1			1	230810110
8HP			1	1			1	330810110
8HP			1		1		1	330810111
10HP	1			1		1		131010100
10HP		1		1		1		231010100
10HP			1	1		1		331010100
10HP			1		1	1		331010101
10HP	1			1			1	131010110
10HP		1		1			1	231010110
10HP			1	1			1	331010110
10HP			1		1		1	331010111
12HP	1			1		1		131210100
12HP		1		1		1		231210100
12HP			1	1		1		331210100
12HP			1		1	1		331210101
12HP	1			1			1	131210110
12HP		1		1			1	231210110
12HP			1	1			1	331210110
12HP			1		1		1	331210111

T01 Panel component

瑞德科诺 RDEKON

6U Panel component

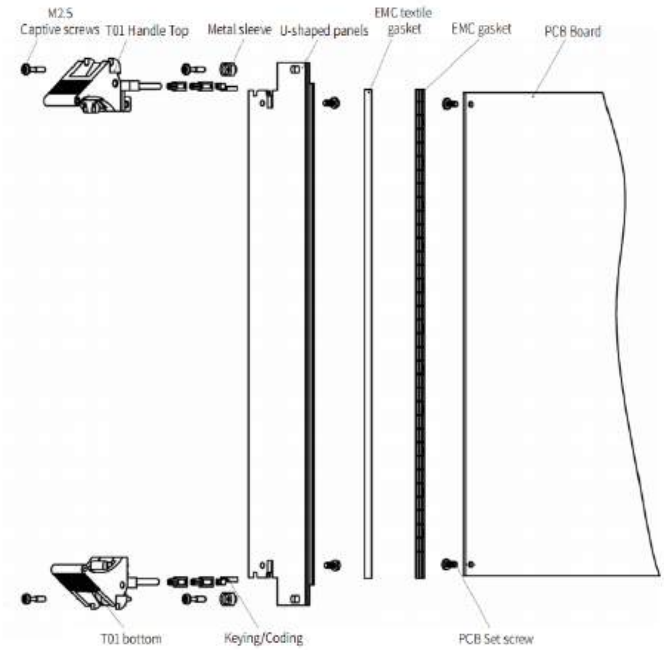

Panel profile

I Profile II Profile III Profile

Delivery Comprises(kit)

Name	Qty	Order no	Description
T01 Top	1	1002012	Install in the top panel
T01 Bottom	1	1002013	Install in the bottom panel
Metal sleeve	2	1014002	Plastic
Metal sleeve	2	1014003	Brass
U-shaped panels	1	/	Front anodised rear conductive
EMC textile gasket	1	1008038	EMC textile gasket
Captive screws	4	1004023	Cross/captive screws M2.5×12 Stainless steel
Keying/Coding	6	1009010	Plastic
EMC gasket	1	1008015	EMC gasket
PCB Set screw	4	1004004	Pan head Pozidrive c/sk screw M2.5×6 Stainless steel

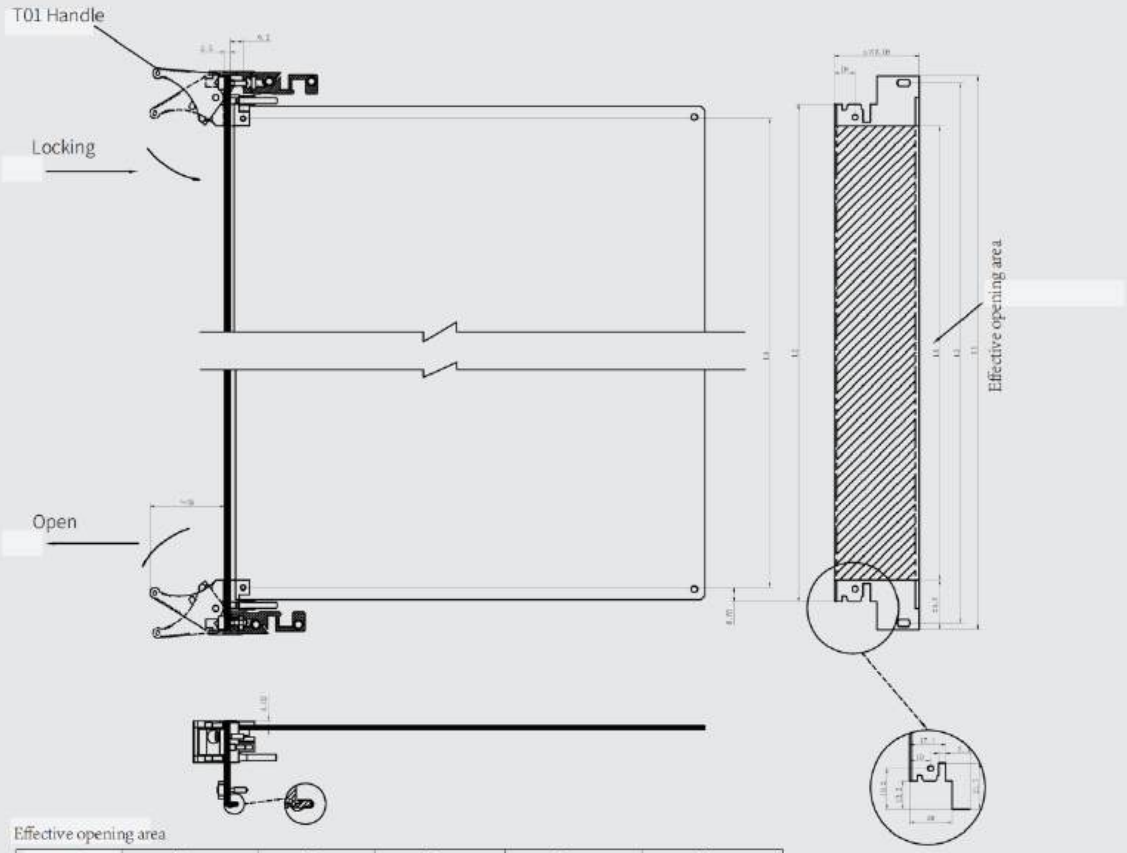

Effective opening area

Height	L1mm	L2mm	L3mm	L4mm	L5mm
30	128.7	115.4	122.5	88.9	81.7
40	173.15	159.85	166.95	133.35	126.15
60	262.05	248.75	255.85	222.25	215.05
90	395.4	382.1	389.2	355.6	348.4

T01 Panel component

6U Panel component

T01 Handle order information

Width	I Panel	II Panel	III Panel	EMC gasket	EMC textile gasket	Black handle	Grey handle	Order no
4HP	1			1		1		160400100
4HP		1		1		1		260400100
4HP			1	1		1		360400100
4HP			1		1	1		360400101
4HP	1			1			1	160400110
4HP		1		1			1	260400110
4HP			1	1			1	360400110
4HP			1		1		1	360400111
5HP	1			1		1		160500100
5HP		1		1		1		260500100
5HP			1	1		1		360500100
5HP			1		1	1		360500101
5HP	1			1			1	160500110
5HP		1		1			1	260500110
5HP			1	1			1	360500110
5HP			1		1		1	360500111
6HP	1			1		1		160600100
6HP		1		1		1		260600100
6HP			1	1		1		360600100
6HP			1		1	1		360600101
6HP	1			1			1	160600110
6HP		1		1			1	260600110
6HP			1	1			1	360600110
6HP			1		1		1	360600111
7HP	1			1		1		160700100
7HP		1		1		1		260700100
7HP			1	1		1		360700100
7HP			1		1	1		360700101
7HP	1			1			1	160700110
7HP		1		1			1	260700110
7HP			1	1			1	360700110
7HP			1		1		1	360700111
8HP	1			1		1		160800100
8HP		1		1		1		260800100
8HP			1	1		1		360800100
8HP			1		1	1		360800101
8HP	1			1			1	160800110
8HP		1		1			1	260800110
8HP			1	1			1	360800110
8HP			1		1		1	360800111
10HP	1			1		1		161000100
10HP		1		1		1		261000100
10HP			1	1		1		361000100
10HP			1		1	1		361000101
10HP	1			1			1	161000110
10HP		1		1			1	261000110
10HP			1	1			1	361000110
10HP			1		1		1	361000111
12HP	1			1		1		161200100
12HP		1		1		1		261200100
12HP			1	1		1		361200100
12HP			1		1	1		361200101
12HP	1			1			1	161200110
12HP		1		1			1	261200110
12HP			1	1			1	361200110
12HP			1		1		1	361200111

T01 Panel component

6U Panel component

T01 Offset Handle order information

Width	I Panel	II Panel	III Panel	EMC gasket	EMC textile gasket	Black handle	Grey handle	Order no
4HP	1			1		1		160410100
4HP		1		1		1		260410100
4HP			1	1		1		360410100
4HP			1		1	1		360410101
4HP	1			1			1	160410110
4HP		1		1			1	260410110
4HP			1	1			1	360410110
4HP			1		1		1	360410111
5HP	1			1		1		160510100
5HP		1		1		1		260510100
5HP			1	1		1		360510100
5HP			1		1	1		360510101
5HP	1			1			1	160510110
5HP		1		1			1	260510110
5HP			1	1			1	360510110
5HP			1		1		1	360510111
6HP	1			1		1		160610100
6HP		1		1		1		260610100
6HP			1	1		1		360610100
6HP			1		1	1		360610101
6HP	1			1			1	160610110
6HP		1		1			1	260610110
6HP			1	1			1	360610110
6HP			1		1		1	360610111
7HP	1			1		1		160710100
7HP		1		1		1		260710100
7HP			1	1		1		360710100
7HP			1		1	1		360710101
7HP	1			1			1	160710110
7HP		1		1			1	260710110
7HP			1	1			1	360710110
7HP			1		1		1	360710111
8HP	1			1		1		160810100
8HP		1		1		1		260810100
8HP			1	1		1		360810100
8HP			1		1	1		360810101
8HP	1			1			1	160810110
8HP		1		1			1	260810110
8HP			1	1			1	360810110
8HP			1		1		1	360810111
10HP	1			1		1		161010100
10HP		1		1		1		261010100
10HP			1	1		1		361010100
10HP			1		1	1		361010101
10HP	1			1			1	161010110
10HP		1		1			1	261010110
10HP			1	1			1	361010110
10HP			1		1		1	361010111
12HP	1			1		1		161210100
12HP		1		1		1		261210100
12HP			1	1		1		361210100
12HP			1		1	1		361210101
12HP	1			1			1	161210110
12HP		1		1			1	261210110
12HP			1	1			1	361210110
12HP			1		1		1	361210111

T02 Panel component

3U Panel component

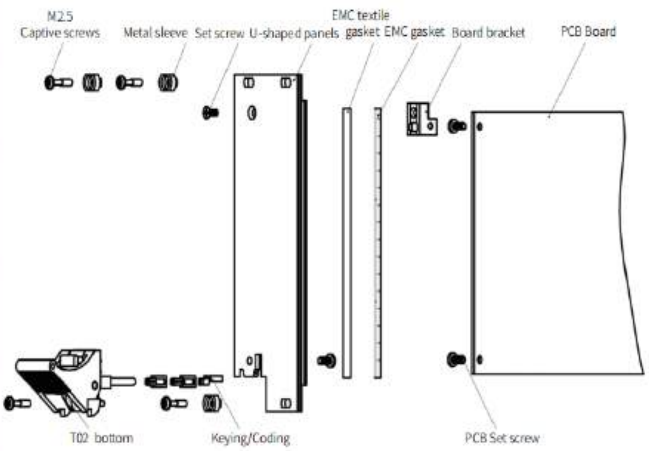

Panel profile

I Profile II Profile III Profile

Delivery Comprises(kit)

Name	Qty	Order no	Description
T02 Bottom	1	1002017	Install in the bottom panel
Metal sleeve	3	1014002	Plastic
Metal sleeve	3	1014003	Brass
U-shaped panels	1	/	Front anodised rear conductive
EMC textile gasket	1	1008038	EMC textile gasket
Captive screws	4	1004023	Cross/captive screws M2.5×12 Stainless steel
Keying/Coding	3	1009010	Plastic
EMC gasket	1	1008015	EMC gasket
PCB Set screw	3	1004004	Pan head Pozidrive c/sk screw M2.5×6 Stainless steel
Set screw	1	1004011	Pan head Pozidrive c/sk screw M2.5×6 Stainless steel
Printed board bracket	1	1015004	Printed board bracket, Die-cast zinc

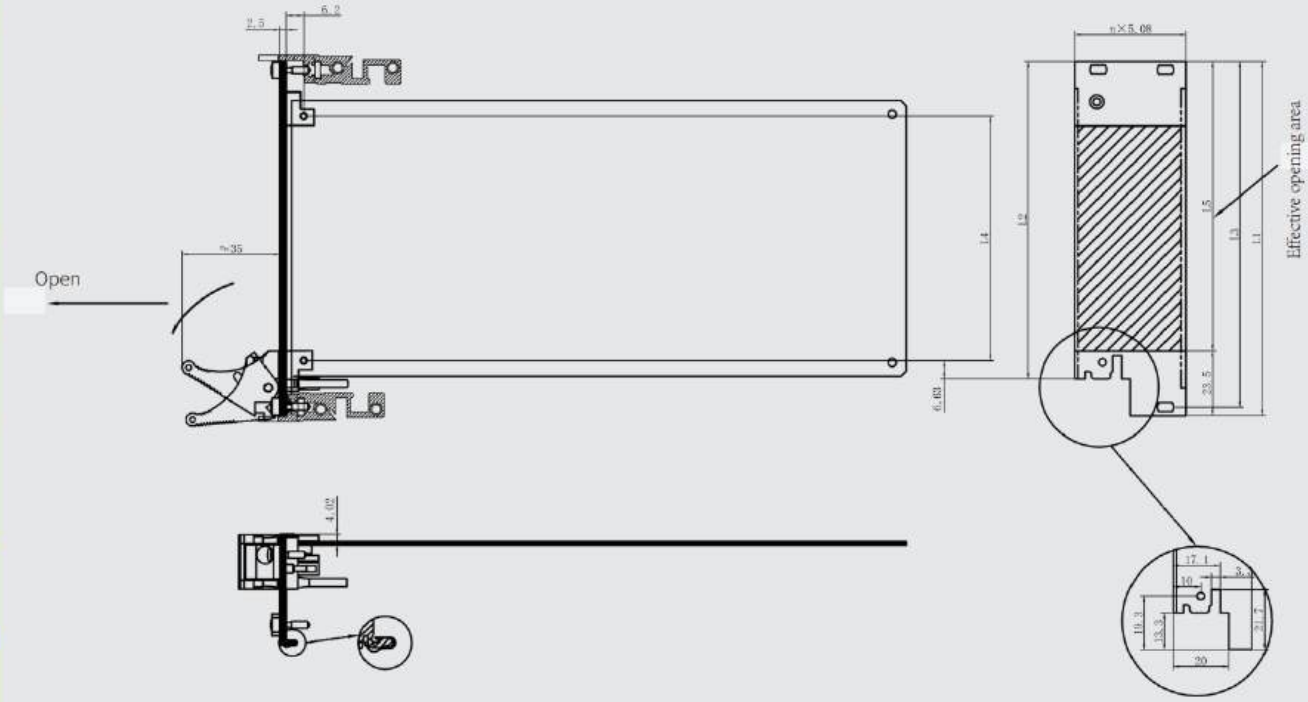

Effective opening area

Height	L1mm	L2mm	L3mm	L4mm	L5mm
3U	128.7	115.4	122.5	88.9	81.7
4U	173.15	159.85	166.95	133.35	126.15
6U	262.05	248.75	255.85	222.25	215.05
9U	395.4	382.1	389.2	355.6	348.4

T02 Panel component

3U Panel component

T02 Handle order information

Width	I Panel	II Panel	III Panel	EMC gasket	EMC textile gasket	Black handle	Grey handle	Order no
4HP	1			1		1		130400200
4HP		1		1		1		230400200
4HP			1	1		1		330400200
4HP			1		1	1		330400201
4HP	1			1			1	130400210
4HP		1		1			1	230400210
4HP			1	1			1	330400210
4HP			1		1		1	330400211
5HP	1			1		1		130500200
5HP		1		1		1		230500200
5HP			1	1		1		330500200
5HP			1		1	1		330500201
5HP	1			1			1	130500210
5HP		1		1			1	230500210
5HP			1	1			1	330500210
5HP			1		1		1	330500211
6HP	1			1		1		130600200
6HP		1		1		1		230600200
6HP			1	1		1		330600200
6HP			1		1	1		330600201
6HP	1			1			1	130600210
6HP		1		1			1	230600210
6HP			1	1			1	330600210
6HP			1		1		1	330600211
7HP	1			1		1		130700200
7HP		1		1		1		230700200
7HP			1	1		1		330700200
7HP			1		1	1		330700201
7HP	1			1			1	130700210
7HP		1		1			1	230700210
7HP			1	1			1	330700210
7HP			1		1		1	330700211
8HP	1			1		1		130800200
8HP		1		1		1		230800200
8HP			1	1		1		330800200
8HP			1		1	1		330800201
8HP	1			1			1	130800210
8HP		1		1			1	230800210
8HP			1	1			1	330800210
8HP			1		1		1	330800211
10HP	1			1		1		131000200
10HP		1		1		1		231000200
10HP			1	1		1		331000200
10HP			1		1	1		331000201
10HP	1			1			1	131000210
10HP		1		1			1	231000210
10HP			1	1			1	331000210
10HP			1		1		1	331000211
12HP	1			1		1		131200200
12HP		1		1		1		231200200
12HP			1	1		1		331200200
12HP			1		1	1		331200201
12HP	1			1			1	131200210
12HP		1		1			1	231200210
12HP			1	1			1	331200210
12HP			1		1		1	331200211

T02 Panel component

3U Panel component

T02 Offset Handle order information

Width	I Panel	II Panel	III Panel	EMC gasket	EMC textile gasket	Black handle	Grey handle	Order no
4HP	1			1		1		130410200
4HP		1		1		1		230410200
4HP			1	1		1		330410200
4HP			1		1	1		330410201
4HP	1			1			1	130410210
4HP		1		1			1	230410210
4HP			1	1			1	330410210
4HP			1		1		1	330410211
5HP	1			1		1		130510200
5HP		1		1		1		230510200
5HP			1	1		1		330510200
5HP			1		1	1		330510201
5HP	1			1			1	130510210
5HP		1		1			1	230510210
5HP			1	1			1	330510210
5HP			1		1		1	330510211
6HP	1			1		1		130610200
6HP		1		1		1		230610200
6HP			1	1		1		330610200
6HP			1		1	1		330610201
6HP	1			1			1	130610210
6HP		1		1			1	230610210
6HP			1	1			1	330610210
6HP			1		1		1	330610211
7HP	1			1		1		130710200
7HP		1		1		1		230710200
7HP			1	1		1		330710200
7HP			1		1	1		330710201
7HP	1			1			1	130710210
7HP		1		1			1	230710210
7HP			1	1			1	330710210
7HP			1		1		1	330710211
8HP	1			1		1		130810200
8HP		1		1		1		230810200
8HP			1	1		1		330810200
8HP			1		1	1		330810201
8HP	1			1			1	130810210
8HP		1		1			1	230810210
8HP			1	1			1	330810210
8HP			1		1		1	330810211
10HP	1			1		1		131010200
10HP		1		1		1		231010200
10HP			1	1		1		331010200
10HP			1		1	1		331010201
10HP	1			1			1	131010210
10HP		1		1			1	231010210
10HP			1	1			1	331010210
10HP			1		1		1	331010211
12HP	1			1		1		131210200
12HP		1		1		1		231210200
12HP			1	1		1		331210200
12HP			1		1	1		331210201
12HP	1			1			1	131210210
12HP		1		1			1	231210210
12HP			1	1			1	331210210
12HP			1		1		1	331210211

T02 Panel component

6U Panel component

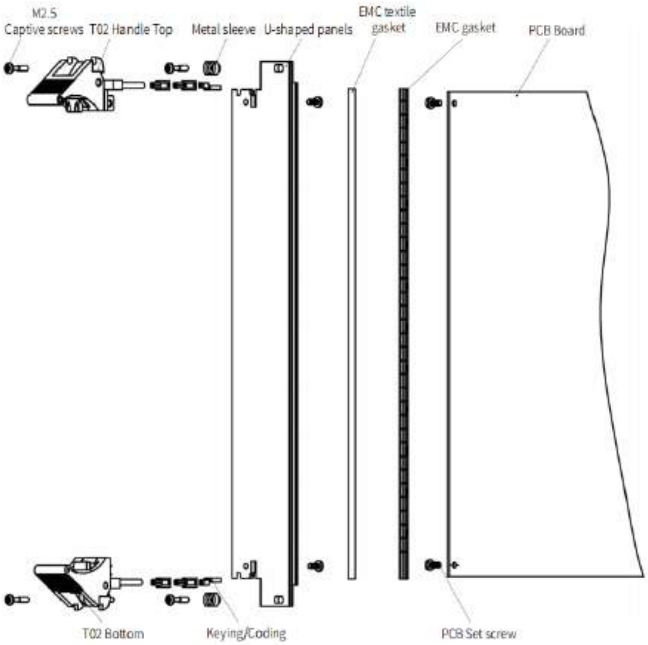

Panel profile

I Profile II Profile III Profile

Delivery Comprises(kit)

Name	Qty	Order no	Description
T02 Top	1	1002016	Install in the top panel
T02 Bottom	1	1002017	Install in the bottom panel
Metal sleeve	2	1014002	Plastic
Metal sleeve	2	1014003	Brass
U-shaped panels	1	/	Front anodised rear conductive
EMC textile gasket	1	1008038	EMC textile gasket
Captive screws	4	1004023	Cross/captive screws M2.5×12 Stainless steel
Keying/Coding	6	1009010	Plastic
EMC gasket	1	1008015	EMC gasket
PCB Set screw	4	1004004	Pan head Pozidrive c/sk screw M2.5×6 Stainless steel

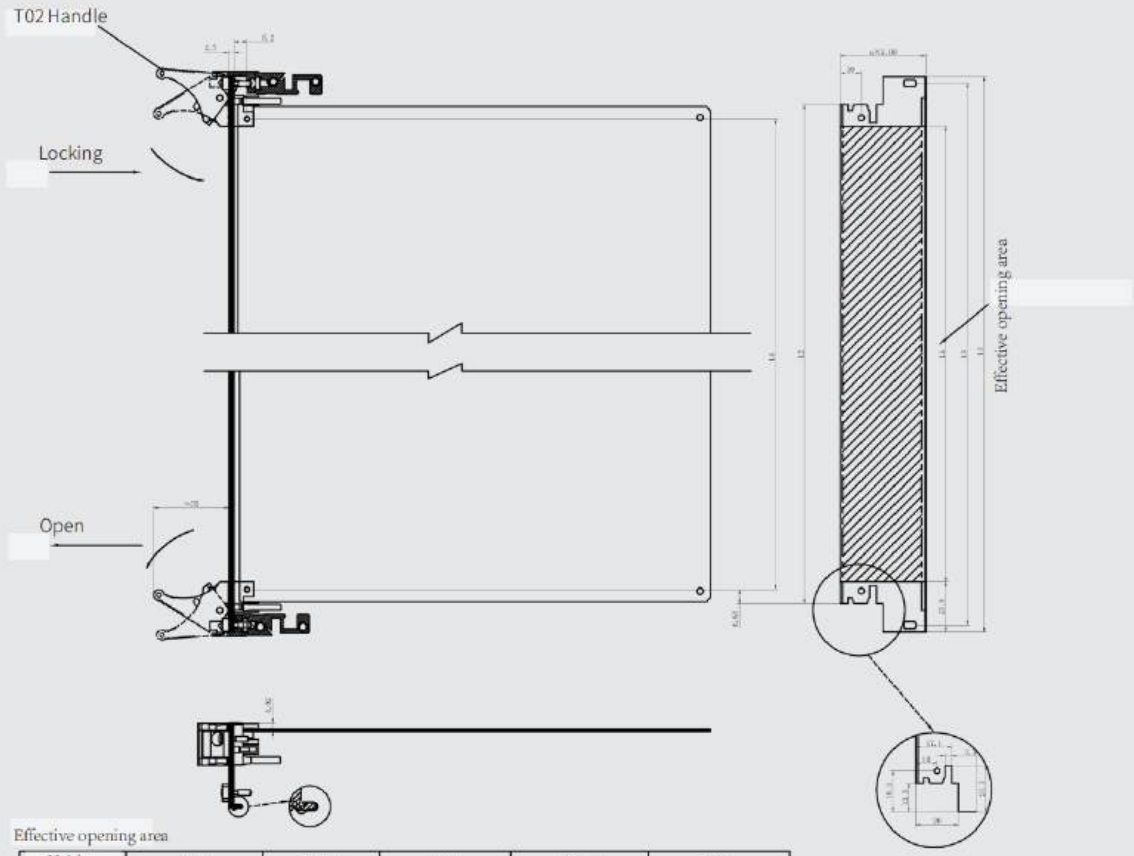

Effective opening area

Height	L1mm	L2mm	L3mm	L4mm	L5mm
3U	128.70	102.00	122.50	88.90	84.65
4U	173.15	146.45	166.95	133.35	126.1
6U	262.05	235.35	255.85	222.25	215
9U	395.40	368.70	389.20	355.60	348.35

T02 Panel component

6U Panel component

T02 Handle order information

Width	I Panel	II Panel	III Panel	EMC gasket	EMC textile gasket	Black handle	Grey handle	Order no
4HP	1			1		1		160400200
4HP		1		1		1		260400200
4HP			1	1		1		360400200
4HP			1		1	1		360400201
4HP	1			1			1	160400210
4HP		1		1			1	260400210
4HP			1	1			1	360400210
4HP			1		1		1	360400211
5HP	1			1		1		160500200
5HP		1		1		1		260500200
5HP			1	1		1		360500200
5HP			1		1	1		360500201
5HP	1			1			1	160500210
5HP		1		1			1	260500210
5HP			1	1			1	360500210
5HP			1		1		1	360500211
6HP	1			1		1		160600200
6HP		1		1		1		260600200
6HP			1	1		1		360600200
6HP			1		1	1		360600201
6HP	1			1			1	160600210
6HP		1		1			1	260600210
6HP			1	1			1	360600210
6HP			1		1		1	360600211
7HP	1			1		1		160700200
7HP		1		1		1		260700200
7HP			1	1		1		360700200
7HP			1		1	1		360700201
7HP	1			1			1	160700210
7HP		1		1			1	260700210
7HP			1	1			1	360700210
7HP			1		1		1	360700211
8HP	1			1		1		160800200
8HP		1		1		1		260800200
8HP			1	1		1		360800200
8HP			1		1	1		360800201
8HP	1			1			1	160800210
8HP		1		1			1	260800210
8HP			1	1			1	360800210
8HP			1		1		1	360800211
10HP	1			1		1		161000200
10HP		1		1		1		261000200
10HP			1	1		1		361000200
10HP			1		1	1		361000201
10HP	1			1			1	161000210
10HP		1		1			1	261000210
10HP			1	1			1	361000210
10HP			1		1		1	361000211
12HP	1			1		1		161200200
12HP		1		1		1		261200200
12HP			1	1		1		361200200
12HP			1		1	1		361200201
12HP	1			1			1	161200210
12HP		1		1			1	261200210
12HP			1	1			1	361200210
12HP			1		1		1	361200211

T02 Panel component

6U Panel component

T02 Offset Handle order information

Width	I Panel	II Panel	III Panel	EMC gasket	EMC textile gasket	Black handle	Grey handle	Order no
4HP	1			1		1		160410200
4HP		1		1		1		260410200
4HP			1	1		1		360410200
4HP			1		1	1		360410201
4HP	1			1			1	160410210
4HP		1		1			1	260410210
4HP			1	1			1	360410210
4HP			1		1		1	360410211
5HP	1			1		1		160510200
5HP		1		1		1		260510200
5HP			1	1		1		360510200
5HP			1		1	1		360510201
5HP	1			1			1	160510210
5HP		1		1			1	260510210
5HP			1	1			1	360510210
5HP			1		1		1	360510211
6HP	1			1		1		160610200
6HP		1		1		1		260610200
6HP			1	1		1		360610200
6HP			1		1	1		360610201
6HP	1			1			1	160610210
6HP		1		1			1	260610210
6HP			1	1			1	360610210
6HP			1		1		1	360610211
7HP	1			1		1		160710200
7HP		1		1		1		260710200
7HP			1	1		1		360710200
7HP			1		1	1		360710201
7HP	1			1			1	160710210
7HP		1		1			1	260710210
7HP			1	1			1	360710210
7HP			1		1		1	360710211
8HP	1			1		1		160810200
8HP		1		1		1		260810200
8HP			1	1		1		360810200
8HP			1		1	1		360810201
8HP	1			1			1	160810210
8HP		1		1			1	260810210
8HP			1	1			1	360810210
8HP			1		1		1	360810211
10HP	1			1		1		161010200
10HP		1		1		1		261010200
10HP			1	1		1		361010200
10HP			1		1	1		361010201
10HP	1			1			1	161010210
10HP		1		1			1	261010210
10HP			1	1			1	361010210
10HP			1		1		1	361010211
12HP	1			1		1		161210200
12HP		1		1		1		261210200
12HP			1	1		1		361210200
12HP			1		1	1		361210201
12HP	1			1			1	161210210
12HP		1		1			1	261210210
12HP			1	1			1	361210210
12HP			1		1		1	361210211

T04 Panel component

3U Panel component

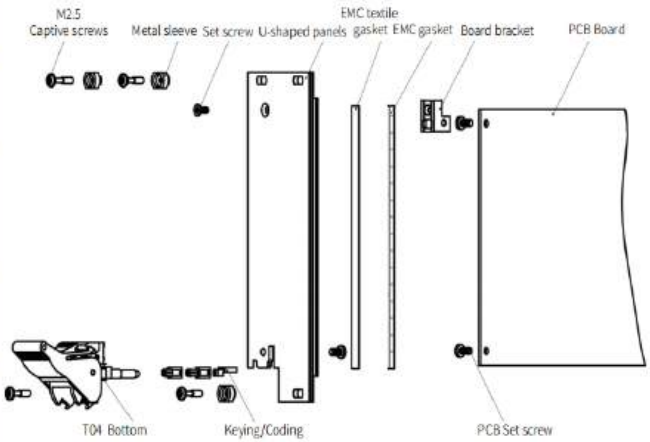

Panel profile

I Profile II Profile III Profile

Delivery Comprises(kit)

Name	Qty	Order no	Description
T04 Bottom	1	1002021	Install in the bottom panel
Metal sleeve	3	1014002	Plastic
Metal sleeve	3	1014003	Brass
U-shaped panels	1	/	Front anodised rear conductive
EMC textile gasket	1	1008038	EMC textile gasket
Captive screws	4	1004023	Cross/captive screws M2.5×12 Stainless steel
Keying/Coding	3	1009010	Plastic
EMC gasket	1	1008015	EMC gasket
PCB Set screw	3	1004004	Pan head Pozidrive c/sk screw M2.5×6 Stainless steel
Set screw	1	1004011	Pan head Pozidrive c/sk screw M2.5×6 Stainless steel
Printed board bracket	1	1015004	Printed board bracket, Die-cast zinc

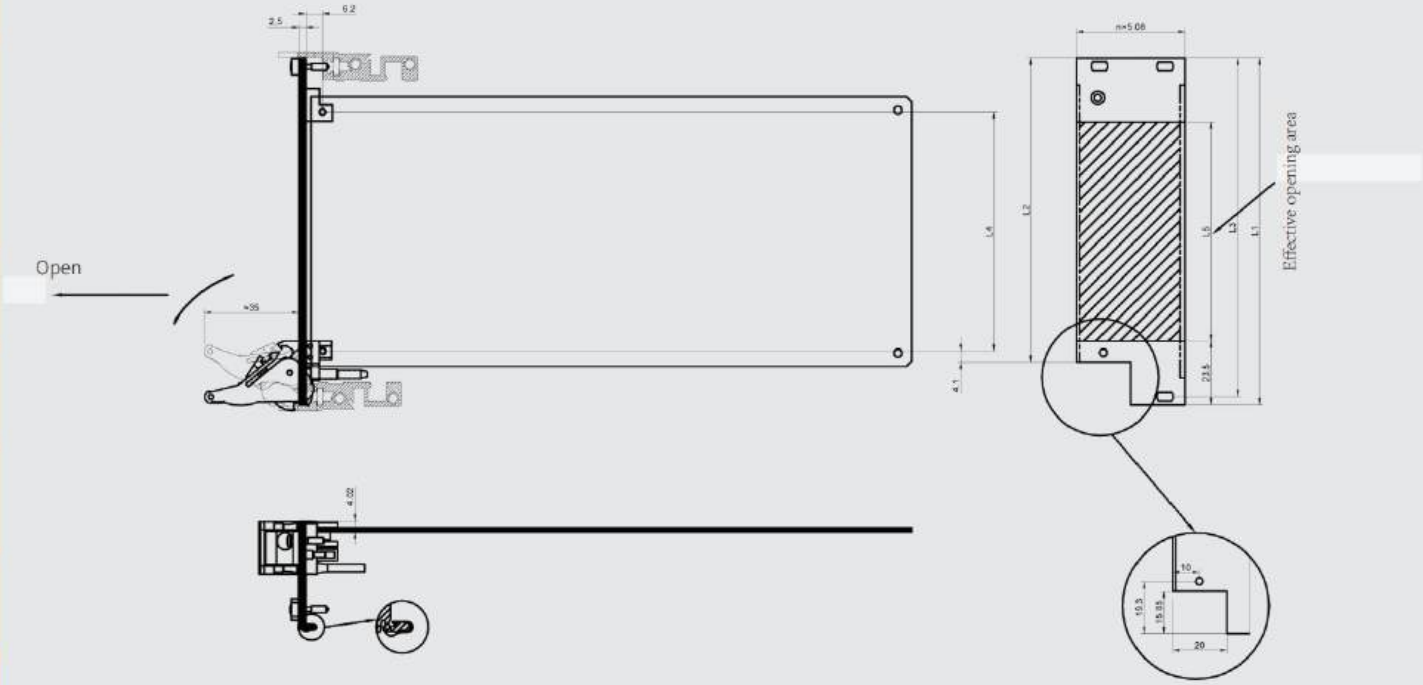

Effective opening area

Height	L1mm	L2mm	L3mm	L4mm	L5mm
3U	128.7	115.4	122.50	88.9	81.7
4U	173.15	159.85	166.95	133.35	126.15
6U	262.05	248.75	255.85	222.25	215.05
9U	395.4	382.1	389.20	355.6	348.4

T04 Panel component

3U Panel component

T04 Handle order information

Width	I Panel	II Panel	III Panel	EMC gasket	EMC textile gasket	Black handle	Grey handle	Order no
4HP	1			1		1		130400400
4HP		1		1		1		230400400
4HP			1	1		1		330400400
4HP			1		1	1		330400401
4HP	1			1			1	130400410
4HP		1		1			1	230400410
4HP			1	1			1	330400410
4HP			1		1		1	330400411
5HP	1			1		1		130500400
5HP		1		1		1		230500400
5HP			1	1		1		330500400
5HP			1		1	1		330500401
5HP	1			1			1	130500410
5HP		1		1			1	230500410
5HP			1	1			1	330500410
5HP			1		1		1	330500411
6HP	1			1		1		130600400
6HP		1		1		1		230600400
6HP			1	1		1		330600400
6HP			1		1	1		330600401
6HP	1			1			1	130600410
6HP		1		1			1	230600410
6HP			1	1			1	330600410
6HP			1		1		1	330600411
7HP	1			1		1		130700400
7HP		1		1		1		230700400
7HP			1	1		1		330700400
7HP			1		1	1		330700401
7HP	1			1			1	130700410
7HP		1		1			1	230700410
7HP			1	1			1	330700410
7HP			1		1		1	330700411
8HP	1			1		1		130800400
8HP		1		1		1		230800400
8HP			1	1		1		330800400
8HP			1		1	1		330800401
8HP	1			1			1	130800410
8HP		1		1			1	230800410
8HP			1	1			1	330800410
8HP			1		1		1	330800411
10HP	1			1		1		131000400
10HP		1		1		1		231000400
10HP			1	1		1		331000400
10HP			1		1	1		331000401
10HP	1			1			1	131000410
10HP		1		1			1	231000410
10HP			1	1			1	331000410
10HP			1		1		1	331000411
12HP	1			1		1		131200400
12HP		1		1		1		231200400
12HP			1	1		1		331200400
12HP			1		1	1		331200401
12HP	1			1			1	131200410
12HP		1		1			1	231200410
12HP			1	1			1	331200410
12HP			1		1		1	331200411

T04 Panel component

3U Panel component

T04 Offset Handle order information

Width	I Panel	II Panel	III Panel	EMC gasket	EMC textile gasket	Black handle	Grey handle	Order no
4HP	1			1		1		130410400
4HP		1		1		1		230410400
4HP			1	1		1		330410400
4HP			1		1	1		330410401
4HP	1			1			1	130410410
4HP		1		1			1	230410410
4HP			1	1			1	330410410
4HP			1		1		1	330410411
5HP	1			1		1		130510400
5HP		1		1		1		230510400
5HP			1	1		1		330510400
5HP			1		1	1		330510401
5HP	1			1			1	130510410
5HP		1		1			1	230510410
5HP			1	1			1	330510410
5HP			1		1		1	330510411
6HP	1			1		1		130610400
6HP		1		1		1		230610400
6HP			1	1		1		330610400
6HP			1		1	1		330610401
6HP	1			1			1	130610410
6HP		1		1			1	230610410
6HP			1	1			1	330610410
6HP			1		1		1	330610411
7HP	1			1		1		130710400
7HP		1		1		1		230710400
7HP			1	1		1		330710400
7HP			1		1	1		330710401
7HP	1			1			1	130710410
7HP		1		1			1	230710410
7HP			1	1			1	330710410
7HP			1		1		1	330710411
8HP	1			1		1		130810400
8HP		1		1		1		230810400
8HP			1	1		1		330810400
8HP			1		1	1		330810401
8HP	1			1			1	130810410
8HP		1		1			1	230810410
8HP			1	1			1	330810410
8HP			1		1		1	330810411
10HP	1			1		1		131010400
10HP		1		1		1		231010400
10HP			1	1		1		331010400
10HP			1		1	1		331010401
10HP	1			1			1	131010410
10HP		1		1			1	231010410
10HP			1	1			1	331010410
10HP			1		1		1	331010411
12HP	1			1		1		131210400
12HP		1		1		1		231210400
12HP			1	1		1		331210400
12HP			1		1	1		331210401
12HP	1			1			1	131210410
12HP		1		1			1	231210410
12HP			1	1			1	331210410
12HP			1		1		1	331210411

T04 Panel component

6U Panel component

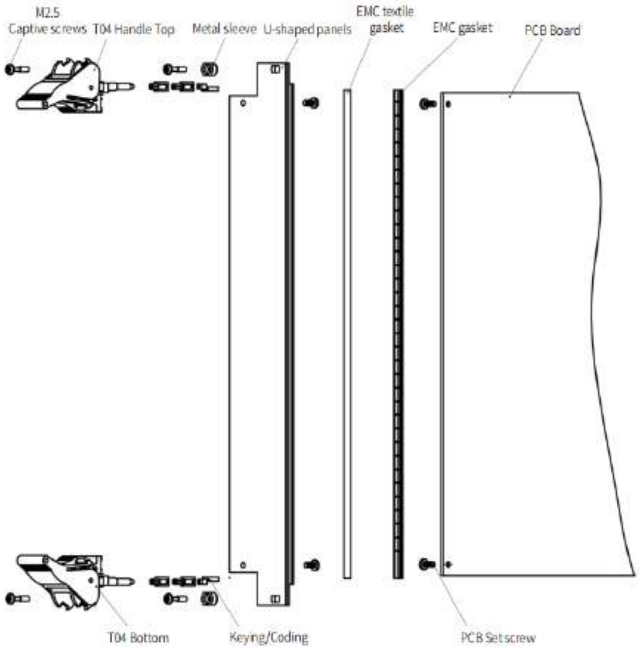

Panel profile

I Profile II Profile III Profile

Delivery Comprises(kit)

Name	Qty	Order no	Description
T04 Top	1	1002022	Install in the top panel
T04 Bottom	1	1002021	Install in the bottom panel
Metal sleeve	2	1014002	Plastic
Metal sleeve	2	1014003	Brass
U-shaped panels	1	/	Front anodised rear conductive
EMC textile gasket	1	1008038	EMC textile gasket
Captive screws	4	1004023	Cross/captive screws M2.5×12 Stainless steel
Keying/Coding	6	1009010	Plastic
EMC gasket	1	1008015	EMC gasket
PCB Set screw	4	1004004	Pan head Pozidrive c/sk screw M2.5×6 Stainless steel

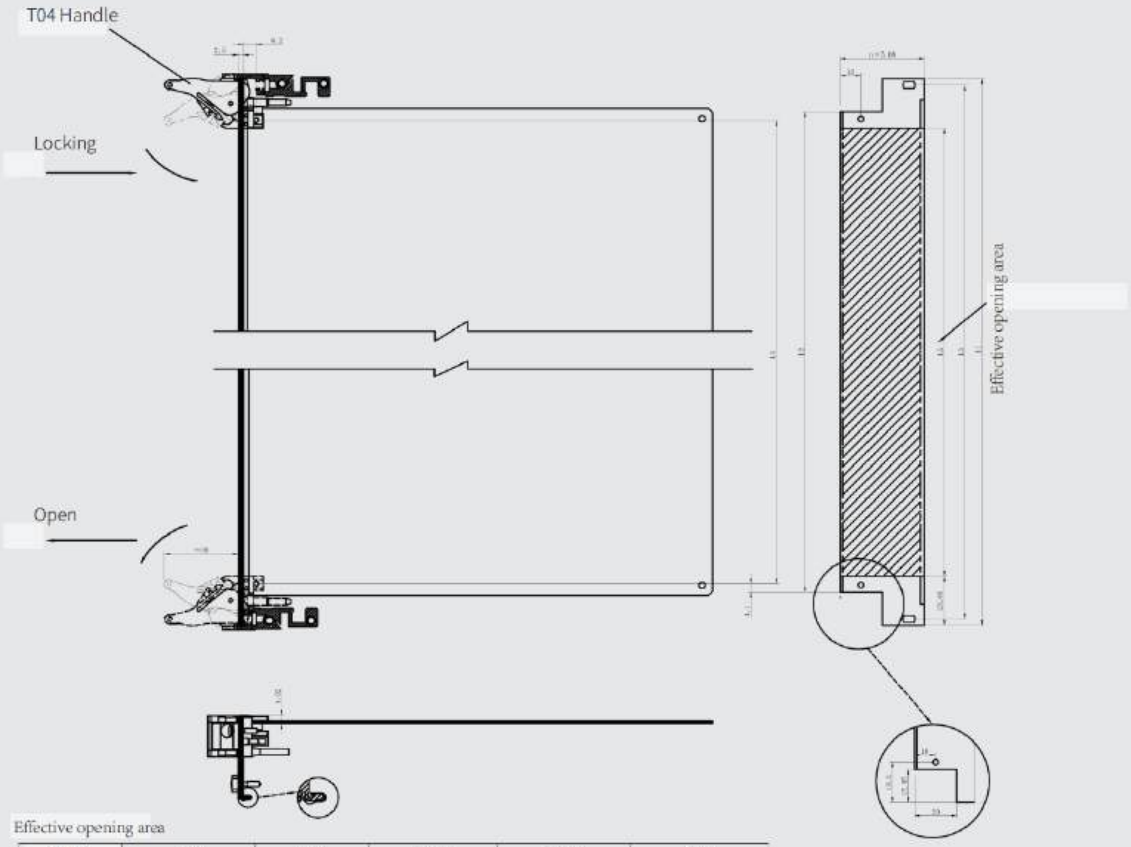

Effective opening area

Height	1.1mm	1.2mm	1.3mm	1.4mm	1.5mm
3U	128.7	115.4	122.50	88.9	81.7
4U	173.15	159.85	166.95	133.35	126.15
6U	262.05	248.75	255.85	222.25	215.05
9U	395.4	382.1	389.20	355.6	348.4

T04 Panel component

瑞德科诺 RDEKON

6U Panel component

T04 Handle order information

Width	I Panel	II Panel	III Panel	EMC gasket	EMC textile gasket	Black handle	Grey handle	Order no
4HP	1			1		1		160400400
4HP		1		1		1		260400400
4HP			1	1		1		360400400
4HP			1		1	1		360400401
4HP	1			1			1	160400410
4HP		1		1			1	260400410
4HP			1	1			1	360400410
4HP			1		1		1	360400411
5HP	1			1		1		160500400
5HP		1		1		1		260500400
5HP			1	1		1		360500400
5HP			1		1	1		360500401
5HP	1			1			1	160500410
5HP		1		1			1	260500410
5HP			1	1			1	360500410
5HP			1		1		1	360500411
6HP	1			1		1		160600400
6HP		1		1		1		260600400
6HP			1	1		1		360600400
6HP			1		1	1		360600401
6HP	1			1			1	160600410
6HP		1		1			1	260600410
6HP			1	1			1	360600410
6HP			1		1		1	360600411
7HP	1			1		1		160700400
7HP		1		1		1		260700400
7HP			1	1		1		360700400
7HP			1		1	1		360700401
7HP	1			1			1	160700410
7HP		1		1			1	260700410
7HP			1	1			1	360700410
7HP			1		1		1	360700411
8HP	1			1		1		160800400
8HP		1		1		1		260800400
8HP			1	1		1		360800400
8HP			1		1	1		360800401
8HP	1			1			1	160800410
8HP		1		1			1	260800410
8HP			1	1			1	360800410
8HP			1		1		1	360800411
10HP	1			1		1		161000400
10HP		1		1		1		261000400
10HP			1	1		1		361000400
10HP			1		1	1		361000401
10HP	1			1			1	161000410
10HP		1		1			1	261000410
10HP			1	1			1	361000410
10HP			1		1		1	361000411
12HP	1			1		1		161200400
12HP		1		1		1		261200400
12HP			1	1		1		361200400
12HP			1		1	1		361200401
12HP	1			1			1	161200410
12HP		1		1			1	261200410
12HP			1	1			1	361200410
12HP			1		1		1	361200411

T04 Panel component

6U Panel component

T04 Offset Handle order information

Width	I Panel	II Panel	III Panel	EMC gasket	EMC textile gasket	Black handle	Grey handle	Order no
4HP	1			1		1		160410400
4HP		1		1		1		260410400
4HP			1	1		1		360410400
4HP			1		1	1		360410401
4HP	1			1			1	160410410
4HP		1		1			1	260410410
4HP			1	1			1	360410410
4HP			1		1		1	360410411
5HP	1			1		1		160510400
5HP		1		1		1		260510400
5HP			1	1		1		360510400
5HP			1		1	1		360510401
5HP	1			1			1	160510410
5HP		1		1			1	260510410
5HP			1	1			1	360510410
5HP			1		1		1	360510411
6HP	1			1		1		160610400
6HP		1		1		1		260610400
6HP			1	1		1		360610400
6HP			1		1	1		360610401
6HP	1			1			1	160610410
6HP		1		1			1	260610410
6HP			1	1			1	360610410
6HP			1		1		1	360610411
7HP	1			1		1		160710400
7HP		1		1		1		260710400
7HP			1	1		1		360710400
7HP			1		1	1		360710401
7HP	1			1			1	160710410
7HP		1		1			1	260710410
7HP			1	1			1	360710410
7HP			1		1		1	360710411
8HP	1			1		1		160810400
8HP		1		1		1		260810400
8HP			1	1		1		360810400
8HP			1		1	1		360810401
8HP	1			1			1	160810410
8HP		1		1			1	260810410
8HP			1	1			1	360810410
8HP			1		1		1	360810411
10HP	1			1		1		161010400
10HP		1		1		1		261010400
10HP			1	1		1		361010400
10HP			1		1	1		361010401
10HP	1			1			1	161010410
10HP		1		1			1	261010410
10HP			1	1			1	361010410
10HP			1		1		1	361010411
12HP	1			1		1		161210400
12HP		1		1		1		261210400
12HP			1	1		1		361210400
12HP			1		1	1		361210401
12HP	1			1			1	161210410
12HP		1		1			1	261210410
12HP			1	1			1	361210410
12HP			1		1		1	361210411

T06 Panel component

3U Panel component

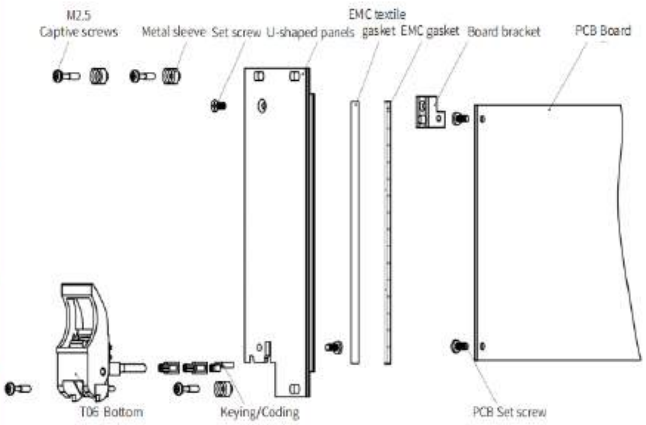

Panel profile

I Profile II Profile III Profile

Delivery Comprises(kit)

Name	Qty	Order no	Description
T06 Bottom	1	1002031	Install in the bottom panel
Metal sleeve	3	1014002	Plastic
Metal sleeve	3	1014003	Brass
U-shaped panels	1	/	Front anodised rear conductive
EMC textile gasket	1	1008038	EMC textile gasket
Captive screws	4	1004023	Cross/captive screws M2.5×12 Stainless steel
Keying/Coding	3	1009010	Plastic
EMC gasket	1	1008015	EMC gasket
PCB Set screw	3	1004004	Pan head Pozidrive c/sk screw M2.5×6 Stainless steel
Set screw	1	1004011	Pan head Pozidrive c/sk screw M2.5×6 Stainless steel
Printed board bracket	1	1015004	Printed board bracket, Die-cast zinc

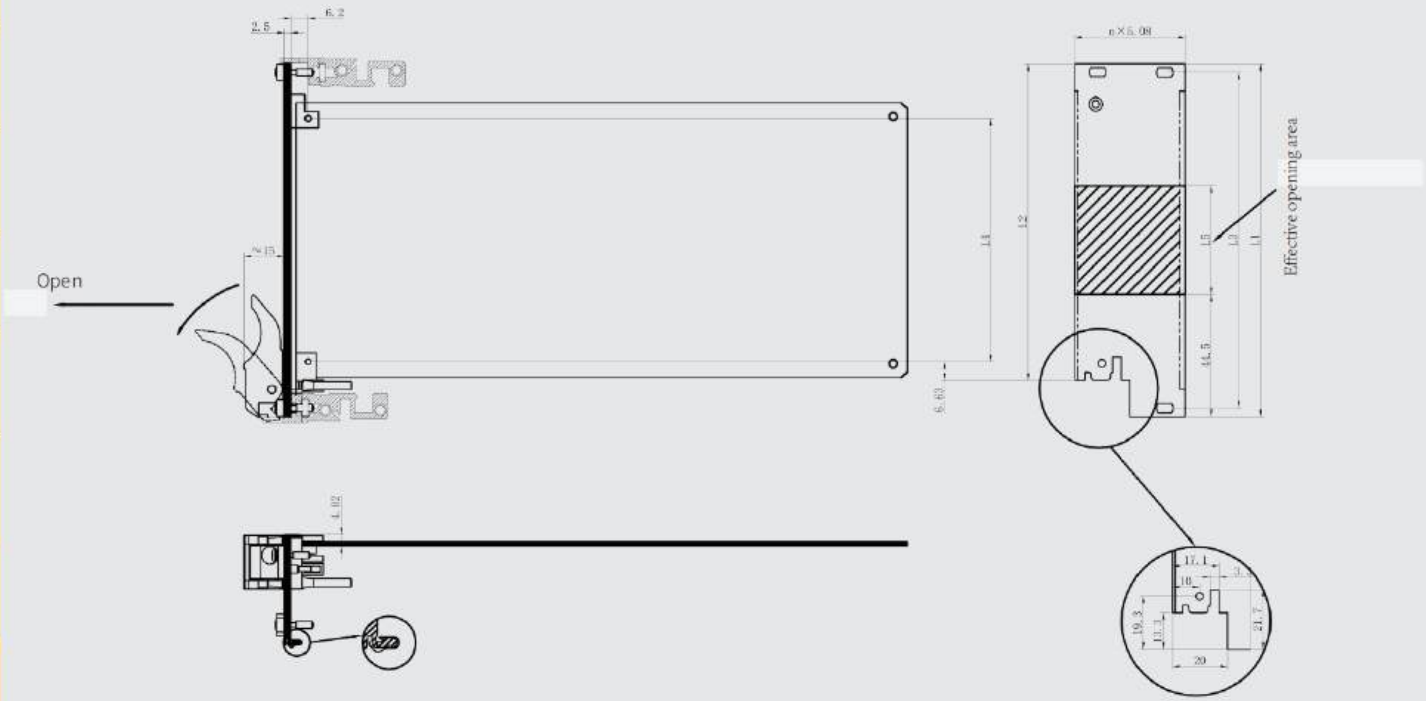

Effective opening area

Height	L1mm	L2mm	L3mm	L4mm	L5mm
3U	128.7	115.4	122.5	88.9	39.8
4U	173.15	159.85	166.95	133.35	84.3
6U	262.05	248.75	255.85	222.25	173.2
9U	395.4	382.1	389.2	355.6	306.5

T06 Panel component

3U Panel component

T06 Handle order information

Width	I Panel	II Panel	III Panel	EMC gasket	EMC textile gasket	Black handle	Grey handle	Order no
4HP	1			1		1		130400600
4HP		1		1		1		230400600
4HP			1	1		1		330400600
4HP			1		1	1		330400601
4HP	1			1			1	130400610
4HP		1		1			1	230400610
4HP			1	1			1	330400610
4HP			1		1		1	330400611
5HP	1			1		1		130500600
5HP		1		1		1		230500600
5HP			1	1		1		330500600
5HP			1		1	1		330500601
5HP	1			1			1	130500610
5HP		1		1			1	230500610
5HP			1	1			1	330500610
5HP			1		1		1	330500611
6HP	1			1		1		130600600
6HP		1		1		1		230600600
6HP			1	1		1		330600600
6HP			1		1	1		330600601
6HP	1			1			1	130600610
6HP		1		1			1	230600610
6HP			1	1			1	330600610
6HP			1		1		1	330600611
7HP	1			1		1		130700600
7HP		1		1		1		230700600
7HP			1	1		1		330700600
7HP			1		1	1		330700601
7HP	1			1			1	130700610
7HP		1		1			1	230700610
7HP			1	1			1	330700610
7HP			1		1		1	330700611
8HP	1			1		1		130800600
8HP		1		1		1		230800600
8HP			1	1		1		330800600
8HP			1		1	1		330800601
8HP	1			1			1	130800610
8HP		1		1			1	230800610
8HP			1	1			1	330800610
8HP			1		1		1	330800611
10HP	1			1		1		131000600
10HP		1		1		1		231000600
10HP			1	1		1		331000600
10HP			1		1	1		331000601
10HP	1			1			1	131000610
10HP		1		1			1	231000610
10HP			1	1			1	331000610
10HP			1		1		1	331000611
12HP	1			1		1		131200600
12HP		1		1		1		231200600
12HP			1	1		1		331200600
12HP			1		1	1		331200601
12HP	1			1			1	131200610
12HP		1		1			1	231200610
12HP			1	1			1	331200610
12HP			1		1		1	331200611

T06 Panel component

3U Panel component

T06 Offset Handle order information

Width	IPanel	IIPanel	IIIPanel	EMC Gasket	EMC textile gasket	Black handle	Grey handle	Order no
4HP	1			1		1		130410600
4HP		1		1		1		230410600
4HP			1	1		1		330410600
4HP			1		1	1		330410601
4HP	1			1			1	130410610
4HP		1		1			1	230410610
4HP			1	1			1	330410610
4HP			1		1		1	330410611
5HP	1			1		1		130510600
5HP		1		1		1		230510600
5HP			1	1		1		330510600
5HP			1		1	1		330510601
5HP	1			1			1	130510610
5HP		1		1			1	230510610
5HP			1	1			1	330510610
5HP			1		1		1	330510611
6HP	1			1		1		130610600
6HP		1		1		1		230610600
6HP			1	1		1		330610600
6HP			1		1	1		330610601
6HP	1			1			1	130610610
6HP		1		1			1	230610610
6HP			1	1			1	330610610
6HP			1		1		1	330610611
7HP	1			1		1		130710600
7HP		1		1		1		230710600
7HP			1	1		1		330710600
7HP			1		1	1		330710601
7HP	1			1			1	130710610
7HP		1		1			1	230710610
7HP			1	1			1	330710610
7HP			1		1		1	330710611
8HP	1			1		1		130810600
8HP		1		1		1		230810600
8HP			1	1		1		330810600
8HP			1		1	1		330810601
8HP	1			1			1	130810610
8HP		1		1			1	230810610
8HP			1	1			1	330810610
8HP			1		1		1	330810611
10HP	1			1		1		131010600
10HP		1		1		1		231010600
10HP			1	1		1		331010600
10HP			1		1	1		331010601
10HP	1			1			1	131010610
10HP		1		1			1	231010610
10HP			1	1			1	331010610
10HP			1		1		1	331010611
12HP	1			1		1		131210600
12HP		1		1		1		231210600
12HP			1	1		1		331210600
12HP			1		1	1		331210601
12HP	1			1			1	131210610
12HP		1		1			1	231210610
12HP			1	1			1	331210610
12HP			1		1		1	331210611

T06 Panel component

6U Panel component

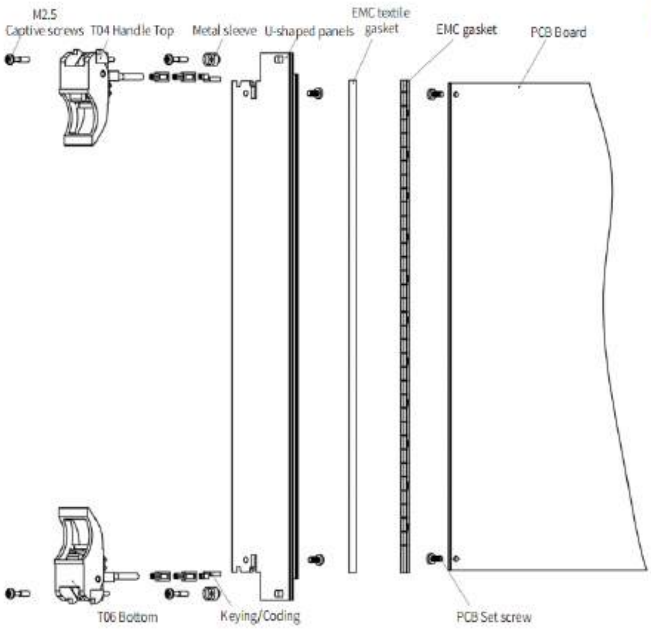

Panel profile

I Profile　　II Profile　　III Profile

Delivery Comprises(kit)

Name	Qty	Order no	Description
T06 Top	1	1002030	Install in the top panel
T06 Bottom	1	1002031	Install in the bottom panel
Metal sleeve	2	1014002	Plastic
Metal sleeve	2	1014003	Brass
U-shaped panels	1	/	Front anodised rear conductive
EMC textile gasket	1	1008038	EMC textile gasket
Captive screws	4	1004023	Cross/captive screws M2.5×12 Stainless steel
Keying/Coding	6	1009010	Plastic
EMC gasket	1	1008015	EMC gasket
PCB Set screw	4	1004004	Pan head Pozidrive c/sk screw M2.5×6 Stainless steel

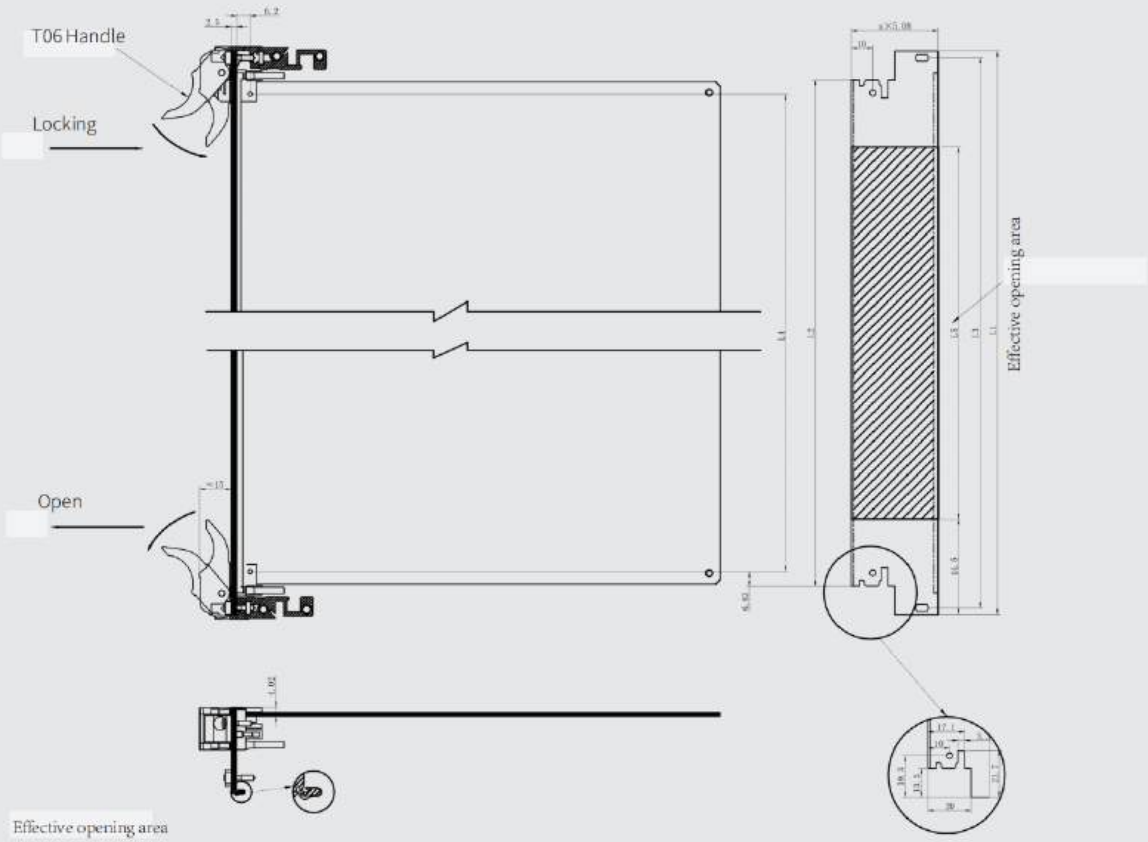

Effective opening area

Height	L1mm	L2mm	L3mm	L4mm	L5mm
3U	128.7	115.4	122.5	88.9	39.8
4U	173.15	159.85	166.95	133.35	84.3
6U	262.05	248.75	255.85	222.25	173.2
9U	395.4	382.1	389.2	355.6	306.5

T06 Panel component

6U Panel component

T06 Handle order information

Width	IPanel	IIPanel	IIIPanel	EMC Gasket	EMC textile gasket	Black handle	Grey handle	Order no
4HP	1			1		1		160400600
4HP		1		1		1		260400600
4HP			1	1		1		360400600
4HP			1		1	1		360400601
4HP	1			1			1	160400610
4HP		1		1			1	260400610
4HP			1	1			1	360400610
4HP			1		1		1	360400611
5HP	1			1		1		160500600
5HP		1		1		1		260500600
5HP			1	1		1		360500600
5HP			1		1	1		360500601
5HP	1			1			1	160500610
5HP		1		1			1	260500610
5HP			1	1			1	360500610
5HP			1		1		1	360500611
6HP	1			1		1		160600600
6HP		1		1		1		260600600
6HP			1	1		1		360600600
6HP			1		1	1		360600601
6HP	1			1			1	160600610
6HP		1		1			1	260600610
6HP			1	1			1	360600610
6HP			1		1		1	360600611
7HP	1			1		1		160700600
7HP		1		1		1		260700600
7HP			1	1		1		360700600
7HP			1		1	1		360700601
7HP	1			1			1	160700610
7HP		1		1			1	260700610
7HP			1	1			1	360700610
7HP			1		1		1	360700611
8HP	1			1		1		160800600
8HP		1		1		1		260800600
8HP			1	1		1		360800600
8HP			1		1	1		360800601
8HP	1			1			1	160800610
8HP		1		1			1	260800610
8HP			1	1			1	360800610
8HP			1		1		1	360800611
10HP	1			1		1		161000600
10HP		1		1		1		261000600
10HP			1	1		1		361000600
10HP			1		1	1		361000601
10HP	1			1			1	161000610
10HP		1		1			1	261000610
10HP			1	1			1	361000610
10HP			1		1		1	361000611
12HP	1			1		1		161200600
12HP		1		1		1		261200600
12HP			1	1		1		361200600
12HP			1		1	1		361200601
12HP	1			1			1	161200610
12HP		1		1			1	261200610
12HP			1	1			1	361200610
12HP			1		1		1	361200611

T06 Panel component

6U Panel component

T06 Offset Handle order information

Width	IPanel	IIPanel	IIIPanel	EMC Gasket	EMC textile gasket	Black handle	Grey handle	Order no
4HP	1			1		1		160410600
4HP		1		1		1		260410600
4HP			1	1		1		360410600
4HP			1		1	1		360410601
4HP	1			1			1	160410610
4HP		1		1			1	260410610
4HP			1	1			1	360410610
4HP			1		1		1	360410611
5HP	1			1		1		160510600
5HP		1		1		1		260510600
5HP			1	1		1		360510600
5HP			1		1	1		360510601
5HP	1			1			1	160510610
5HP		1		1			1	260510610
5HP			1	1			1	360510610
5HP			1		1		1	360510611
6HP	1			1		1		160610600
6HP		1		1		1		260610600
6HP			1	1		1		360610600
6HP			1		1	1		360610601
6HP	1			1			1	160610610
6HP		1		1			1	260610610
6HP			1	1			1	360610610
6HP			1		1		1	360610611
7HP	1			1		1		160710600
7HP		1		1		1		260710600
7HP			1	1		1		360710600
7HP			1		1	1		360710601
7HP	1			1			1	160710610
7HP		1		1			1	260710610
7HP			1	1			1	360710610
7HP			1		1		1	360710611
8HP	1			1		1		160810600
8HP		1		1		1		260810600
8HP			1	1		1		360810600
8HP			1		1	1		360810601
8HP	1			1			1	160810610
8HP		1		1			1	260810610
8HP			1	1			1	360810610
8HP			1		1		1	360810611
10HP	1			1		1		161010600
10HP		1		1		1		261010600
10HP			1	1		1		361010600
10HP			1		1	1		361010601
10HP	1			1			1	161010610
10HP		1		1			1	261010610
10HP			1	1			1	361010610
10HP			1		1		1	361010611
12HP	1			1		1		161210600
12HP		1		1		1		261210600
12HP			1	1		1		361210600
12HP			1		1	1		361210601
12HP	1			1			1	161210610
12HP		1		1			1	261210610
12HP			1	1			1	361210610
12HP			1		1		1	361210611

T07 Panel component

3U Panel component

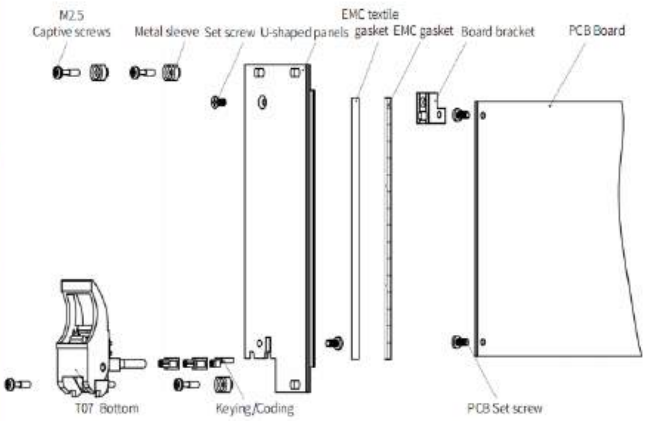

Panel profile

I Profile II Profile III Profile

Delivery Comprises(kit)

Name	Qty	Order no	Description
T07 Bottom	1	1002033	Install in the bottom panel
Metal sleeve	3	1014002	Plastic
Metal sleeve	3	1014003	Brass
U-shaped panels	1	/	Front anodised rear conductive
EMC textile gasket	1	1008038	EMC textile gasket
Captive screws	4	1004023	Cross/captive screws M2.5×12 Stainless steel
Keying/Coding	3	1009010	Plastic
EMC gasket	1	1008015	EMC gasket
PCB Set screw	3	1004004	Pan head Pozidrive c/sk screw M2.5×6 Stainless steel
Set screw	1	1004011	Pan head Pozidrive c/sk screw M2.5×6 Stainless steel
Printed board bracket	1	1015004	Printed board bracket, PC+20%GF, Die-cast zinc

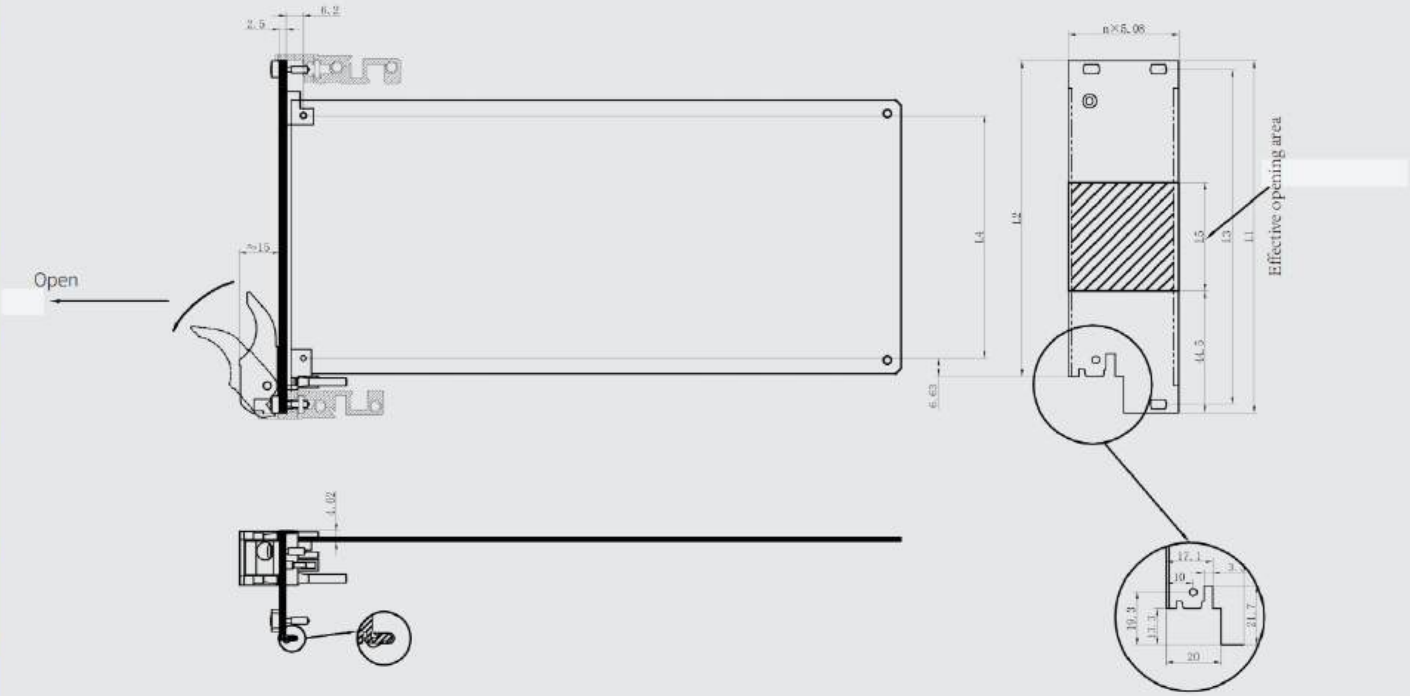

Effective opening area

Height	L1mm	L2mm	L3mm	L4mm	L5mm
3U	128.7	115.4	122.5	88.9	39.8
4U	173.15	159.85	166.95	133.35	84.3
6U	262.05	248.75	255.85	222.25	173.2
9U	395.4	382.1	389.2	355.6	306.5

T07 Panel component

3U Panel component

T07 Handle order information

Width	IPanel	IIPanel	IIIPanel	EMC Gasket	EMC textile gasket	Black handle	Grey handle	Order no
4HP	1			1		1		130400700
4HP		1		1		1		230400700
4HP			1	1		1		330400700
4HP			1		1	1		330400701
4HP	1			1			1	130400710
4HP		1		1			1	230400710
4HP			1	1			1	330400710
4HP			1		1		1	330400711
5HP	1			1		1		130500700
5HP		1		1		1		230500700
5HP			1	1		1		330500700
5HP			1		1	1		330500701
5HP	1			1			1	130500710
5HP		1		1			1	230500710
5HP			1	1			1	330500710
5HP			1		1		1	330500711
6HP	1			1		1		130600700
6HP		1		1		1		230600700
6HP			1	1		1		330600700
6HP			1		1	1		330600701
6HP	1			1			1	130600710
6HP		1		1			1	230600710
6HP			1	1			1	330600710
6HP			1		1		1	330600711
7HP	1			1		1		130700700
7HP		1		1		1		230700700
7HP			1	1		1		330700700
7HP			1		1	1		330700701
7HP	1			1			1	130700710
7HP		1		1			1	230700710
7HP			1	1			1	330700710
7HP			1		1		1	330700711
8HP	1			1		1		130800700
8HP		1		1		1		230800700
8HP			1	1		1		330800700
8HP			1		1	1		330800701
8HP	1			1			1	130800710
8HP		1		1			1	230800710
8HP			1	1			1	330800710
8HP			1		1		1	330800711
10HP	1			1		1		131000700
10HP		1		1		1		231000700
10HP			1	1		1		331000700
10HP			1		1	1		331000701
10HP	1			1			1	131000710
10HP		1		1			1	231000710
10HP			1	1			1	331000710
10HP			1		1		1	331000711
12HP	1			1		1		131200700
12HP		1		1		1		231200700
12HP			1	1		1		331200700
12HP			1		1	1		331200701
12HP	1			1			1	131200710
12HP		1		1			1	231200710
12HP			1	1			1	331200710
12HP			1		1		1	331200711

T07 Panel component

瑞德科诺 RDEKON

3U Panel component

T07 Offset Handle order information

Width	IPanel	IIPanel	IIIPanel	EMC Gasket	EMC textile gasket	Black handle	Grey handle	Order no
4HP	1			1		1		130410700
4HP		1		1		1		230410700
4HP			1	1		1		330410700
4HP			1		1	1		330410701
4HP	1			1			1	130410710
4HP		1		1			1	230410710
4HP			1	1			1	330410710
4HP			1		1		1	330410711
5HP	1			1		1		130510700
5HP		1		1		1		230510700
5HP			1	1		1		330510700
5HP			1		1	1		330510701
5HP	1			1			1	130510710
5HP		1		1			1	230510710
5HP			1	1			1	330510710
5HP			1		1		1	330510711
6HP	1			1		1		130610700
6HP		1		1		1		230610700
6HP			1	1		1		330610700
6HP			1		1	1		330610701
6HP	1			1			1	130610710
6HP		1		1			1	230610710
6HP			1	1			1	330610710
6HP			1		1		1	330610711
7HP	1			1		1		130710700
7HP		1		1		1		230710700
7HP			1	1		1		330710700
7HP			1		1	1		330710701
7HP	1			1			1	130710710
7HP		1		1			1	230710710
7HP			1	1			1	330710710
7HP			1		1		1	330710711
8HP	1			1		1		130810700
8HP		1		1		1		230810700
8HP			1	1		1		330810700
8HP			1		1	1		330810701
8HP	1			1			1	130810710
8HP		1		1			1	230810710
8HP			1	1			1	330810710
8HP			1		1		1	330810711
10HP	1			1		1		131010700
10HP		1		1		1		231010700
10HP			1	1		1		331010700
10HP			1		1	1		331010701
10HP	1			1			1	131010710
10HP		1		1			1	231010710
10HP			1	1			1	331010710
10HP			1		1		1	331010711
12HP	1			1		1		131210700
12HP		1		1		1		231210700
12HP			1	1		1		331210700
12HP			1		1	1		331210701
12HP	1			1			1	131210710
12HP		1		1			1	231210710
12HP			1	1			1	331210710
12HP			1		1		1	331210711

T07 Panel component

6U Panel component

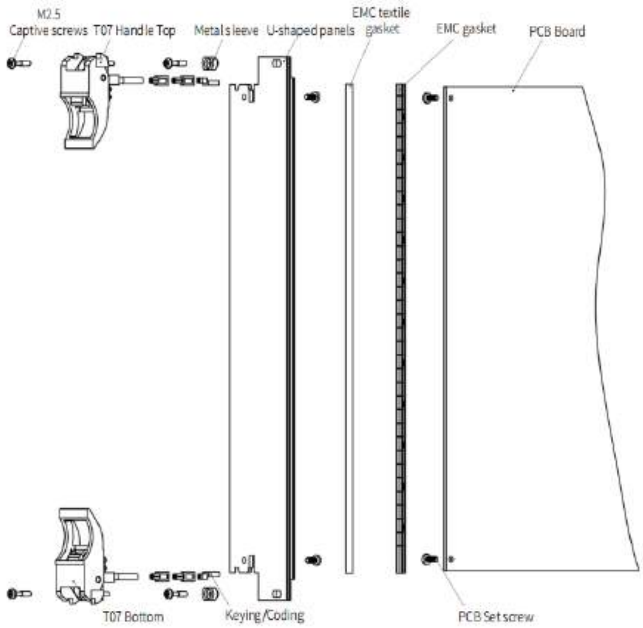

Panel profile

I Profile II Profile III Profile

Delivery Comprises(kit)

Name	Qty	Order no	Description
T07 Top	1	1002032	Install in the top panel
T01 Bottom	1	1002033	Install in the bottom panel
Metal sleeve	2	1014002	Plastic
Metal sleeve	2	1014003	Brass
U-shaped panels	1	/	Front anodised rear conductive
EMC textile gasket	1	1008038	EMC textile gasket
Captive screws	4	1004023	Cross/captive screws M2.5×12 Stainless steel
Keying/Coding	6	1009010	Plastic
EMC gasket	1	1008015	EMC gasket
PCB Set screw	4	1004004	Pan head Pozidrive c/sk screw M2.5×6 Stainless steel

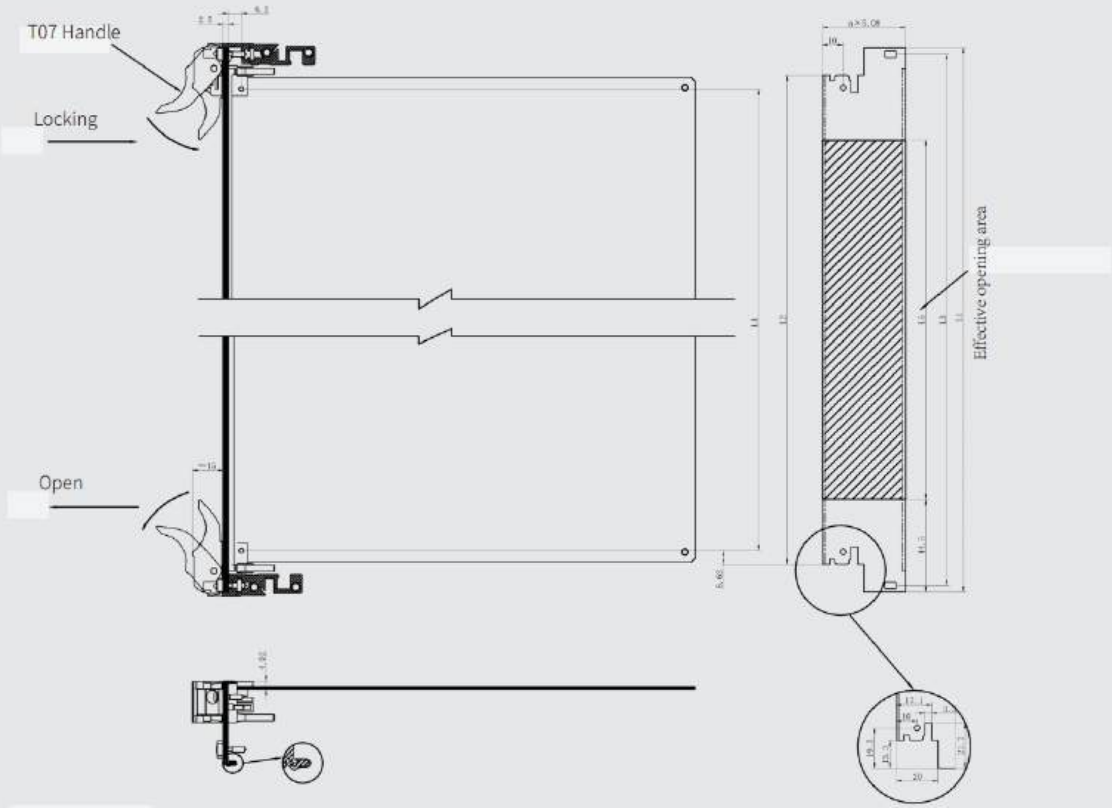

Effective opening area

Height	L1mm	L2mm	L3mm	L4mm	L5mm
3U	128.7	115.4	122.5	88.9	39.8
4U	173.15	159.85	166.95	133.35	84.3
6U	262.05	248.75	255.85	222.25	173.2
9U	395.4	382.1	389.2	355.6	306.5

T07 Panel component

6U Panel component

T07 Handle order information

Width	IPanel	IIPanel	IIIPanel	EMC Gasket	EMC textile gasket	Black handle	Grey handle	Order no
4HP	1			1		1		160400700
4HP		1		1		1		260400700
4HP			1	1		1		360400700
4HP			1		1	1		360400701
4HP	1			1			1	160400710
4HP		1		1			1	260400710
4HP			1	1			1	360400710
4HP			1		1		1	360400711
5HP	1			1		1		160500700
5HP		1		1		1		260500700
5HP			1	1		1		360500700
5HP			1		1	1		360500701
5HP	1			1			1	160500710
5HP		1		1			1	260500710
5HP			1	1			1	360500710
5HP			1		1		1	360500711
6HP	1			1		1		160600700
6HP		1		1		1		260600700
6HP			1	1		1		360600700
6HP			1		1	1		360600701
6HP	1			1			1	160600710
6HP		1		1			1	260600710
6HP			1	1			1	360600710
6HP			1		1		1	360600711
7HP	1			1		1		160700700
7HP		1		1		1		260700700
7HP			1	1		1		360700700
7HP			1		1	1		360700701
7HP	1			1			1	160700710
7HP		1		1			1	260700710
7HP			1	1			1	360700710
7HP			1		1		1	360700711
8HP	1			1		1		160800700
8HP		1		1		1		260800700
8HP			1	1		1		360800700
8HP			1		1	1		360800701
8HP	1			1			1	160800710
8HP		1		1			1	260800710
8HP			1	1			1	360800710
8HP			1		1		1	360800711
10HP	1			1		1		161000700
10HP		1		1		1		261000700
10HP			1	1		1		361000700
10HP			1		1	1		361000701
10HP	1			1			1	161000710
10HP		1		1			1	261000710
10HP			1	1			1	361000710
10HP			1		1		1	361000711
12HP	1			1		1		161200700
12HP		1		1		1		261200700
12HP			1	1		1		361200700
12HP			1		1	1		361200701
12HP	1			1			1	161200710
12HP		1		1			1	261200710
12HP			1	1			1	361200710
12HP			1		1		1	361200711

T07 Panel component

6U Panel component

T07 Offset Handle order information

Width	IPanel	IIPanel	IIIPanel	EMC Gasket	EMC textile gasket	Black handle	Grey handle	Order no
4HP	1			1		1		160410700
4HP		1		1		1		260410700
4HP			1	1		1		360410700
4HP			1		1	1		360410701
4HP	1			1			1	160410710
4HP		1		1			1	260410710
4HP			1	1			1	360410710
4HP			1		1		1	360410711
5HP	1			1		1		160510700
5HP		1		1		1		260510700
5HP			1	1		1		360510700
5HP			1		1	1		360510701
5HP	1			1			1	160510710
5HP		1		1			1	260510710
5HP			1	1			1	360510710
5HP			1		1		1	360510711
6HP	1			1		1		160610700
6HP		1		1		1		260610700
6HP			1	1		1		360610700
6HP			1		1	1		360610701
6HP	1			1			1	160610710
6HP		1		1			1	260610710
6HP			1	1			1	360610710
6HP			1		1		1	360610711
7HP	1			1		1		160710700
7HP		1		1		1		260710700
7HP			1	1		1		360710700
7HP			1		1	1		360710701
7HP	1			1			1	160710710
7HP		1		1			1	260710710
7HP			1	1			1	360710710
7HP			1		1		1	360710711
8HP	1			1		1		160810700
8HP		1		1		1		260810700
8HP			1	1		1		360810700
8HP			1		1	1		360810701
8HP	1			1			1	160810710
8HP		1		1			1	260810710
8HP			1	1			1	360810710
8HP			1		1		1	360810711
10HP	1			1		1		161010700
10HP		1		1		1		261010700
10HP			1	1		1		361010700
10HP			1		1	1		361010701
10HP	1			1			1	161010710
10HP		1		1			1	261010710
10HP			1	1			1	361010710
10HP			1		1		1	361010711
12HP	1			1		1		161210700
12HP		1		1		1		261210700
12HP			1	1		1		361210700
12HP			1		1	1		361210701
12HP	1			1			1	161210710
12HP		1		1			1	261210710
12HP			1	1			1	361210710
12HP			1		1		1	361210711

T08 Panel component

3U Panel component

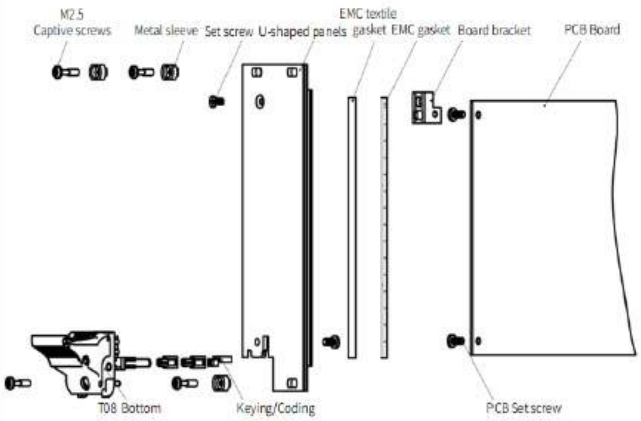

Panel profile

I Profile II Profile III Profile

Delivery Comprises(kit)

Name	Qty	Order no	Description
T08 Bottom	1	1002037	Install in the bottom panel
Metal sleeve	3	1014002	Plastic
Metal sleeve	3	1014003	Brass
U-shaped panels	1	/	Front anodised rear conductive
EMC textile gasket	1	1008038	EMC textile gasket
Captive screws	4	1004023	Cross/captive screws M2.5×12 Stainless steel
Keying/Coding	3	1009010	Plastic
EMC gasket	1	1008015	EMC gasket
PCB Set screw	3	1004004	Pan head Pozidrive c/sk screw M2.5×6 Stainless steel
Set screw	1	1004011	Pan head Pozidrive c/sk screw M2.5×6 Stainless steel
Printed board bracket	1	1015004	Printed board bracket, PC+20%GF, Die-cast zinc

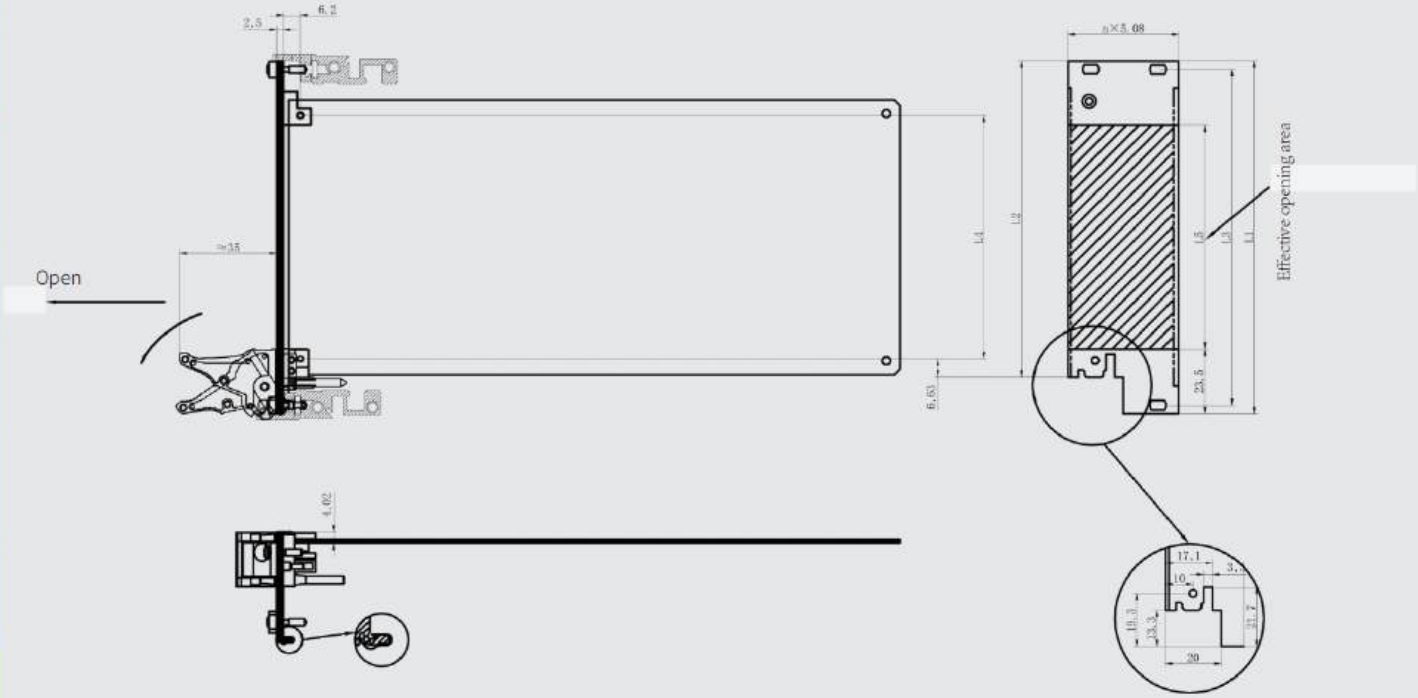

Effective opening area

Height	L1mm	L2mm	L3mm	L4mm	L5mm
3U	128.7	115.4	122.5	88.9	81.7
4U	173.15	159.85	166.95	133.35	126.15
6U	262.05	248.75	255.85	222.25	215.05
9U	395.4	382.1	389.2	355.6	348.4

T08 Panel component

3U Panel component

T08 Handle order information

Width	IPanel	IIPanel	IIIPanel	EMC Gasket	EMC textile gasket	Black handle	Grey handle	Order no
4HP	1			1		1		130400800
4HP		1		1		1		230400800
4HP			1	1		1		330400800
4HP			1		1	1		330400801
4HP	1			1			1	130400810
4HP		1		1			1	230400810
4HP			1	1			1	330400810
4HP			1		1		1	330400811
5HP	1			1		1		130500800
5HP		1		1		1		230500800
5HP			1	1		1		330500800
5HP			1		1	1		330500801
5HP	1			1			1	130500810
5HP		1		1			1	230500810
5HP			1	1			1	330500810
5HP			1		1		1	330500811
6HP	1			1		1		130600800
6HP		1		1		1		230600800
6HP			1	1		1		330600800
6HP			1		1	1		330600801
6HP	1			1			1	130600810
6HP		1		1			1	230600810
6HP			1	1			1	330600810
6HP			1		1		1	330600811
7HP	1			1		1		130700800
7HP		1		1		1		230700800
7HP			1	1		1		330700800
7HP			1		1	1		330700801
7HP	1			1			1	130700810
7HP		1		1			1	230700810
7HP			1	1			1	330700810
7HP			1		1		1	330700811
8HP	1			1		1		130800800
8HP		1		1		1		230800800
8HP			1	1		1		330800800
8HP			1		1	1		330800801
8HP	1			1			1	130800810
8HP		1		1			1	230800810
8HP			1	1			1	330800810
8HP			1		1		1	330800811
10HP	1			1		1		131000800
10HP		1		1		1		231000800
10HP			1	1		1		331000800
10HP			1		1	1		331000801
10HP	1			1			1	131000810
10HP		1		1			1	231000810
10HP			1	1			1	331000810
10HP			1		1		1	331000811
12HP	1			1		1		131200800
12HP		1		1		1		231200800
12HP			1	1		1		331200800
12HP			1		1	1		331200801
12HP	1			1			1	131200810
12HP		1		1			1	231200810
12HP			1	1			1	331200810
12HP			1		1		1	331200811

T08 Panel component

瑞德科诺 RDEKON

3U Panel component

T08 Offset Handle order information

Width	IPanel	IIPanel	IIIPanel	EMC Gasket	EMC textile gasket	Black handle	Grey handle	Order no
4HP	1			1		1		130410800
4HP		1		1		1		230410800
4HP			1	1		1		330410800
4HP			1		1	1		330410801
4HP	1			1			1	130410810
4HP		1		1			1	230410810
4HP			1	1			1	330410810
4HP			1		1		1	330410811
5HP	1			1		1		130510800
5HP		1		1		1		230510800
5HP			1	1		1		330510800
5HP			1		1	1		330510801
5HP	1			1			1	130510810
5HP		1		1			1	230510810
5HP			1	1			1	330510810
5HP			1		1		1	330510811
6HP	1			1		1		130610800
6HP		1		1		1		230610800
6HP			1	1		1		330610800
6HP			1		1	1		330610801
6HP	1			1			1	130610810
6HP		1		1			1	230610810
6HP			1	1			1	330610810
6HP			1		1		1	330610811
7HP	1			1		1		130710800
7HP		1		1		1		230710800
7HP			1	1		1		330710800
7HP			1		1	1		330710801
7HP	1			1			1	130710810
7HP		1		1			1	230710810
7HP			1	1			1	330710810
7HP			1		1		1	330710811
8HP	1			1		1		130810800
8HP		1		1		1		230810800
8HP			1	1		1		330810800
8HP			1		1	1		330810801
8HP	1			1			1	130810810
8HP		1		1			1	230810810
8HP			1	1			1	330810810
8HP			1		1		1	330810811
10HP	1			1		1		131010800
10HP		1		1		1		231010800
10HP			1	1		1		331010800
10HP			1		1	1		331010801
10HP	1			1			1	131010810
10HP		1		1			1	231010810
10HP			1	1			1	331010810
10HP			1		1		1	331010811
12HP	1			1		1		131210800
12HP		1		1		1		231210800
12HP			1	1		1		331210800
12HP			1		1	1		331210801
12HP	1			1			1	131210810
12HP		1		1			1	231210810
12HP			1	1			1	331210810
12HP			1		1		1	331210811

T08 Panel component

6U Panel component

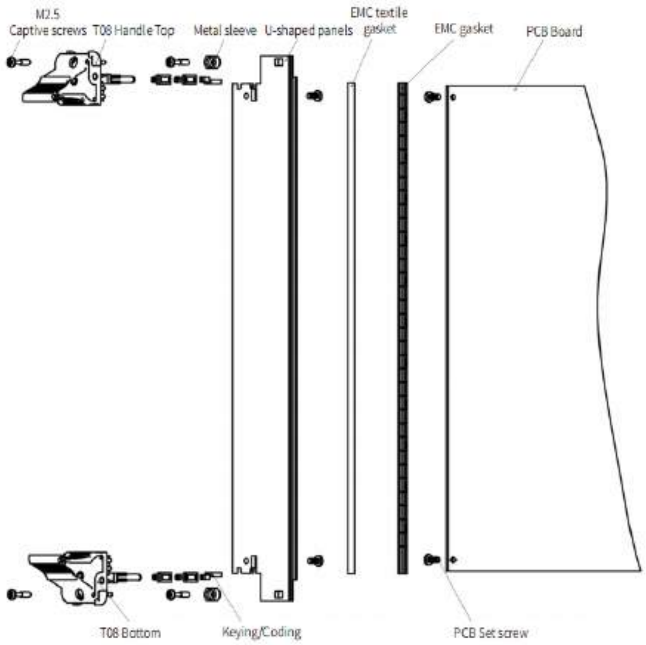

Panel profile

I Profile II Profile III Profile

Delivery Comprises(kit)

Name	Qty	Order no	Description
T08 Top	1	1002034	Install in the top panel
T08 Bottom	1	1002035	Install in the bottom panel
Metal sleeve	2	1014002	Plastic
Metal sleeve	2	1014003	Brass
U-shaped panels	1	/	Front anodised rear conductive
EMC textile gasket	1	1008038	EMC textile gasket
Captive screws	4	1004023	Cross/captive screws M2.5×12 Stainless steel
Keying/Coding	6	1009010	Plastic
EMC gasket	1	1008015	EMC gasket
PCB Set screw	4	1004004	Pan head Pozidrive c/sk screw M2.5×6 Stainless steel

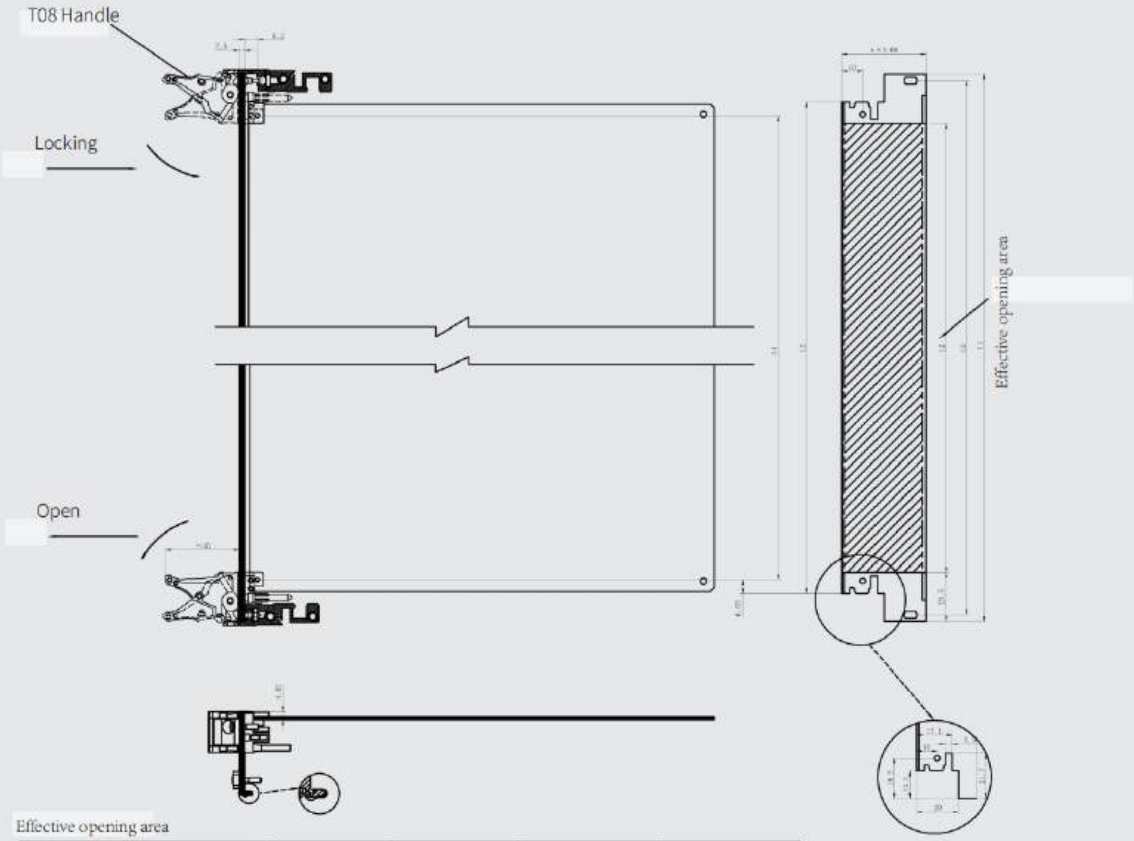

Effective opening area

Height	L1mm	L2mm	L3mm	L4mm	L5mm
3U	128.7	115.4	122.5	88.9	81.7
4U	173.15	159.85	166.95	133.35	126.15
6U	262.05	248.75	255.85	222.25	215.05
9U	395.4	382.1	389.2	355.6	348.4

T08 Panel component

瑞德科诺 RDEKON

6U Panel component

T08 Handle order information

Width	IPanel	IIPanel	IIIPanel	EMC Gasket	EMC textile gasket	Black handle	Grey handle	Order no
4HP	1			1		1		160400800
4HP		1		1		1		260400800
4HP			1	1		1		360400800
4HP			1		1	1		360400801
4HP	1			1			1	160400810
4HP		1		1			1	260400810
4HP			1	1			1	360400810
4HP			1		1		1	360400811
5HP	1			1		1		160500800
5HP		1		1		1		260500800
5HP			1	1		1		360500800
5HP			1		1	1		360500801
5HP	1			1			1	160500810
5HP		1		1			1	260500810
5HP			1	1			1	360500810
5HP			1		1		1	360500811
6HP	1			1		1		160600800
6HP		1		1		1		260600800
6HP			1	1		1		360600800
6HP			1		1	1		360600801
6HP	1			1			1	160600810
6HP		1		1			1	260600810
6HP			1	1			1	360600810
6HP			1		1		1	360600811
7HP	1			1		1		160700800
7HP		1		1		1		260700800
7HP			1	1		1		360700800
7HP			1		1	1		360700801
7HP	1			1			1	160700810
7HP		1		1			1	260700810
7HP			1	1			1	360700810
7HP			1		1		1	360700811
8HP	1			1		1		160800800
8HP		1		1		1		260800800
8HP			1	1		1		360800800
8HP			1		1	1		360800801
8HP	1			1			1	160800810
8HP		1		1			1	260800810
8HP			1	1			1	360800810
8HP			1		1		1	360800811
10HP	1			1		1		161000800
10HP		1		1		1		261000800
10HP			1	1		1		361000800
10HP			1		1	1		361000801
10HP	1			1			1	161000810
10HP		1		1			1	261000810
10HP			1	1			1	361000810
10HP			1		1		1	361000811
12HP	1			1		1		161200800
12HP		1		1		1		261200800
12HP			1	1		1		361200800
12HP			1		1	1		361200801
12HP	1			1			1	161200810
12HP		1		1			1	261200810
12HP			1	1			1	361200810
12HP			1		1		1	361200811

T08 Panel component

6U Panel component

T08 Offset Handle order information

Width	IPanel	IIPanel	IIIPanel	EMC Gasket	EMC textile gasket	Black handle	Grey handle	Order no
4HP	1			1		1		160410800
4HP		1		1		1		260410800
4HP			1	1		1		360410800
4HP			1		1	1		360410801
4HP	1			1			1	160410810
4HP		1		1			1	260410810
4HP			1	1			1	360410810
4HP			1		1		1	360410811
5HP	1			1		1		160510800
5HP		1		1		1		260510800
5HP			1	1		1		360510800
5HP			1		1	1		360510801
5HP	1			1			1	160510810
5HP		1		1			1	260510810
5HP			1	1			1	360510810
5HP			1		1		1	360510811
6HP	1			1		1		160610800
6HP		1		1		1		260610800
6HP			1	1		1		360610800
6HP			1		1	1		360610801
6HP	1			1			1	160610810
6HP		1		1			1	260610810
6HP			1	1			1	360610810
6HP			1		1		1	360610811
7HP	1			1		1		160710800
7HP		1		1		1		260710800
7HP			1	1		1		360710800
7HP			1		1	1		360710801
7HP	1			1			1	160710810
7HP		1		1			1	260710810
7HP			1	1			1	360710810
7HP			1		1		1	360710811
8HP	1			1		1		160810800
8HP		1		1		1		260810800
8HP			1	1		1		360810800
8HP			1		1	1		360810801
8HP	1			1			1	160810810
8HP		1		1			1	260810810
8HP			1	1			1	360810810
8HP			1		1		1	360810811
10HP	1			1		1		161010800
10HP		1		1		1		261010800
10HP			1	1		1		361010800
10HP			1		1	1		361010801
10HP	1			1			1	161010810
10HP		1		1			1	261010810
10HP			1	1			1	361010810
10HP			1		1		1	361010811
12HP	1			1		1		161210800
12HP		1		1		1		261210800
12HP			1	1		1		361210800
12HP			1		1	1		361210801
12HP	1			1			1	161210810
12HP		1		1			1	261210810
12HP			1	1			1	361210810
12HP			1		1		1	361210811

T46 Panel component

瑞德科诺 RDEKON

3U Panel component

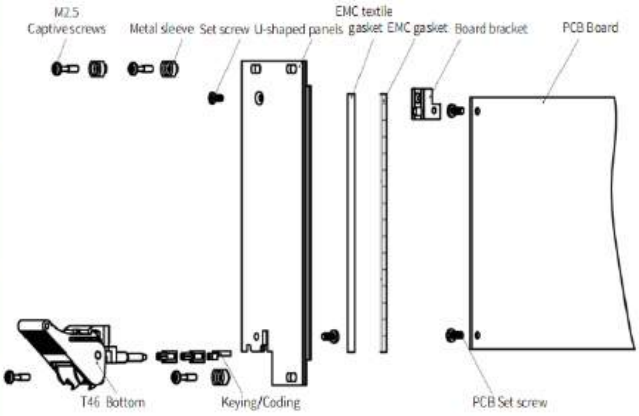

Panel profile

I Profile II Profile III Profile

Delivery Comprises(kit)

Name	Qty	Order no	Description
T46 Bottom	1	1002519	Install in the bottom panel
Metal sleeve	3	1014002	Plastic
Metal sleeve	3	1014003	Brass
U-shaped panels	1	/	Front anodised rear conductive
EMC textile gasket	1	1008038	EMC textile gasket
Captive screws	4	1004023	Cross/captive screws M2.5×12 Stainless steel
Keying/Coding	3	1009010	Plastic
EMC gasket	1	1008015	EMC gasket
PCB Set screw	3	1004004	Pan head Pozidrive c/sk screw M2.5×6 Stainless steel
Set screw	1	1004011	Pan head Pozidrive c/sk screw M2.5×6 Stainless steel
Printed board bracket	1	1015004	Printed board bracket, PC+20%GF, Die-cast zinc

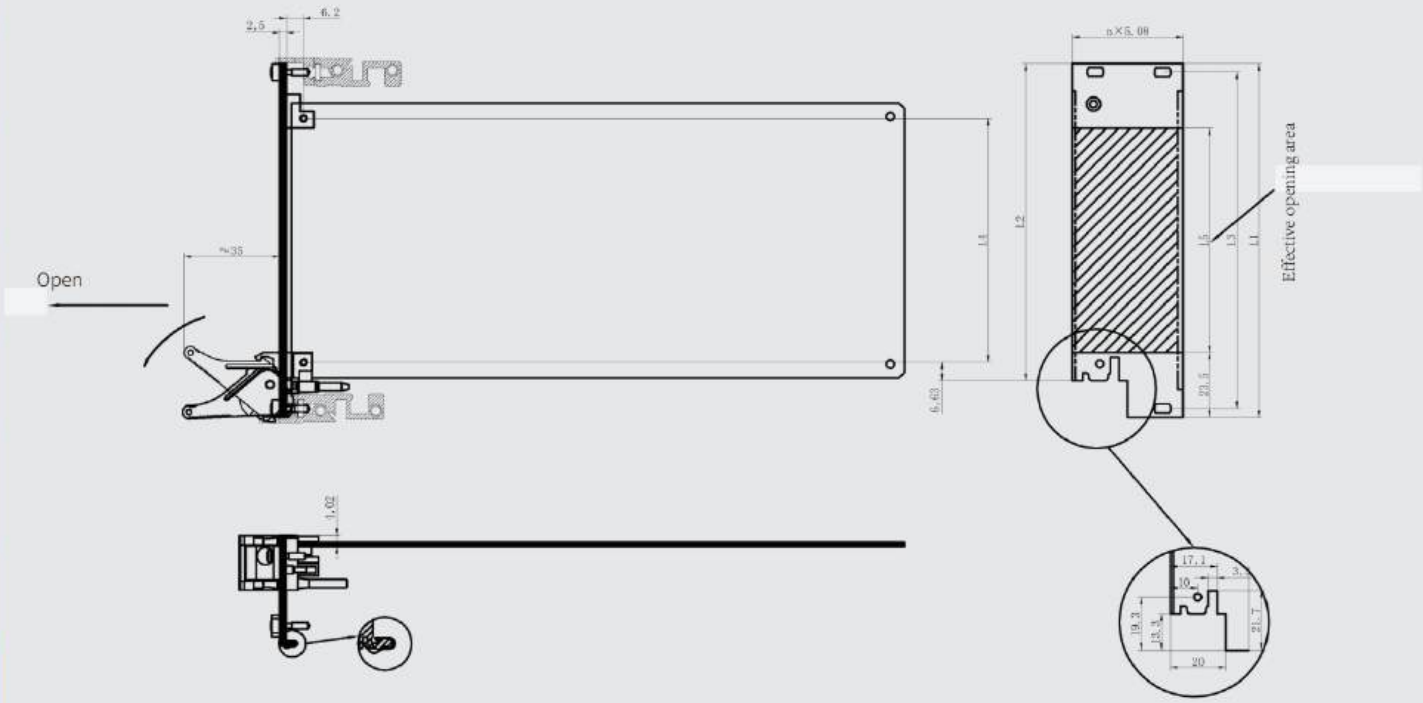

Effective opening area

Height	L1mm	L2mm	L3mm	L4mm	L5mm
3U	128.7	115.4	122.5	88.9	81.7
4U	173.15	159.85	166.95	133.35	126.15
6U	262.05	248.75	255.85	222.25	215.05
9U	395.4	382.1	389.2	355.6	348.4

T46 Panel component

3U Panel component

T46 Handle order information

Width	IPanel	IIPanel	IIIPanel	EMC Gasket	EMC textile gasket	Black handle	Grey handle	Order no
4HP	1			1		1		130404630
4HP		1		1		1		230404630
4HP			1	1		1		330404630
4HP			1		1	1		330404631
4HP	1			1			1	130404640
4HP		1		1			1	230404640
4HP			1	1			1	330404640
4HP			1		1		1	330404641
5HP	1			1		1		130504630
5HP		1		1		1		230504630
5HP			1	1		1		330504630
5HP			1		1	1		330504631
5HP	1			1			1	130504640
5HP		1		1			1	230504640
5HP			1	1			1	330504640
5HP			1		1		1	330504641
6HP	1			1		1		130604630
6HP		1		1		1		230604630
6HP			1	1		1		330604630
6HP			1		1	1		330604631
6HP	1			1			1	130604640
6HP		1		1			1	230604640
6HP			1	1			1	330604640
6HP			1		1		1	330604641
7HP	1			1		1		130704630
7HP		1		1		1		230704630
7HP			1	1		1		330704630
7HP			1		1	1		330704631
7HP	1			1			1	130704640
7HP		1		1			1	230704640
7HP			1	1			1	330704640
7HP			1		1		1	330704641
8HP	1			1		1		130806430
8HP		1		1		1		230804630
8HP			1	1		1		330804630
8HP			1		1	1		330804631
8HP	1			1			1	130804640
8HP		1		1			1	230804640
8HP			1	1			1	330804640
8HP			1		1		1	330804641
10HP	1			1		1		131004630
10HP		1		1		1		231004630
10HP			1	1		1		331004630
10HP			1		1	1		331004631
10HP	1			1			1	131004640
10HP		1		1			1	231004640
10HP			1	1			1	331004640
10HP			1		1		1	331004641
12HP	1			1		1		131204630
12HP		1		1		1		231204630
12HP			1	1		1		331204630
12HP			1		1	1		331204631
12HP	1			1			1	131204640
12HP		1		1			1	231204640
12HP			1	1			1	331204640
12HP			1		1		1	331204641

T46 Panel component

3U Panel component

T46 Offset Handle order information

Width	IPanel	IIPanel	IIIPanel	EMC Gasket	EMC textile gasket	Black handle	Grey handle	Order no
4HP	1			1		1		130414630
4HP		1		1		1		230414630
4HP			1	1		1		330414630
4HP			1		1	1		330414631
4HP	1			1			1	130414640
4HP		1		1			1	230414640
4HP			1	1			1	330414640
4HP			1		1		1	330414641
5HP	1			1		1		130514630
5HP		1		1		1		230514630
5HP			1	1		1		330514630
5HP			1		1	1		330514631
5HP	1			1			1	130514640
5HP		1		1			1	230514640
5HP			1	1			1	330514640
5HP			1		1		1	330514641
6HP	1			1		1		130614630
6HP		1		1		1		230614630
6HP			1	1		1		330614630
6HP			1		1	1		330614631
6HP	1			1			1	130614640
6HP		1		1			1	230614640
6HP			1	1			1	330614640
6HP			1		1		1	330614641
7HP	1			1		1		130714630
7HP		1		1		1		230714630
7HP			1	1		1		330714630
7HP			1		1	1		330714631
7HP	1			1			1	130714640
7HP		1		1			1	230714640
7HP			1	1			1	330714640
7HP			1		1		1	330714641
8HP	1			1		1		130814630
8HP		1		1		1		230814630
8HP			1	1		1		330814630
8HP			1		1	1		330814631
8HP	1			1			1	130814640
8HP		1		1			1	230814640
8HP			1	1			1	330814640
8HP			1		1		1	330814641
10HP	1			1		1		131014630
10HP		1		1		1		231014630
10HP			1	1		1		331014630
10HP			1		1	1		331014631
10HP	1			1			1	131014640
10HP		1		1			1	231014640
10HP			1	1			1	331014640
10HP			1		1		1	331014641
12HP	1			1		1		131214630
12HP		1		1		1		231214630
12HP			1	1		1		331214630
12HP			1		1	1		331214631
12HP	1			1			1	131214640
12HP		1		1			1	231214640
12HP			1	1			1	331214640
12HP			1		1		1	331214641

T46 Panel component

6U Panel component

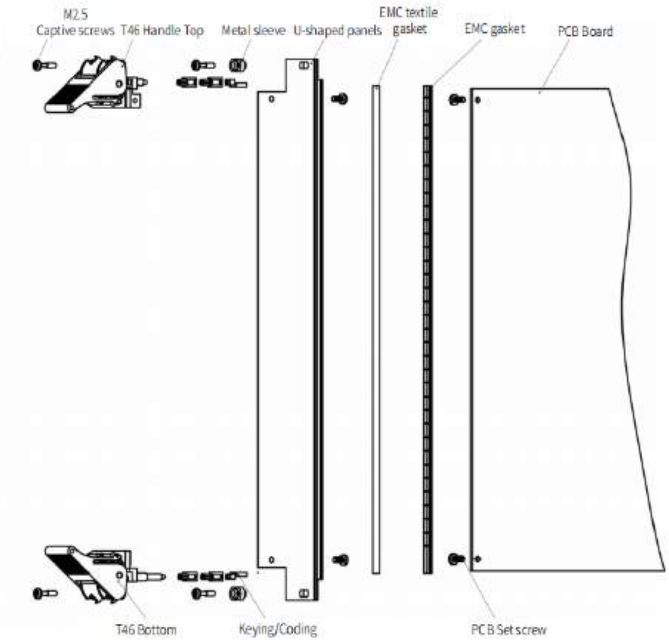

Panel profile

I Profile II Profile III Profile

Delivery Comprises(kit)

Name	Qty	Order no	Description
T46 Top	1	1002518	Install in the top panel
T46 Bottom	1	1002519	Install in the bottom panel
Metal sleeve	2	1014002	Plastic
Metal sleeve	2	1014003	Brass
U-shaped panels	1	/	Front anodised rear conductive
EMC textile gasket	1	1008038	EMC textile gasket
Captive screws	4	1004023	Cross/captive screws M2.5×12 Stainless steel
Keying/Coding	6	1009010	Plastic
EMC gasket	1	1008015	EMC gasket
PCB Set screw	4	1004004	Pan head Pozidrive c/sk screw M2.5×6 Stainless steel

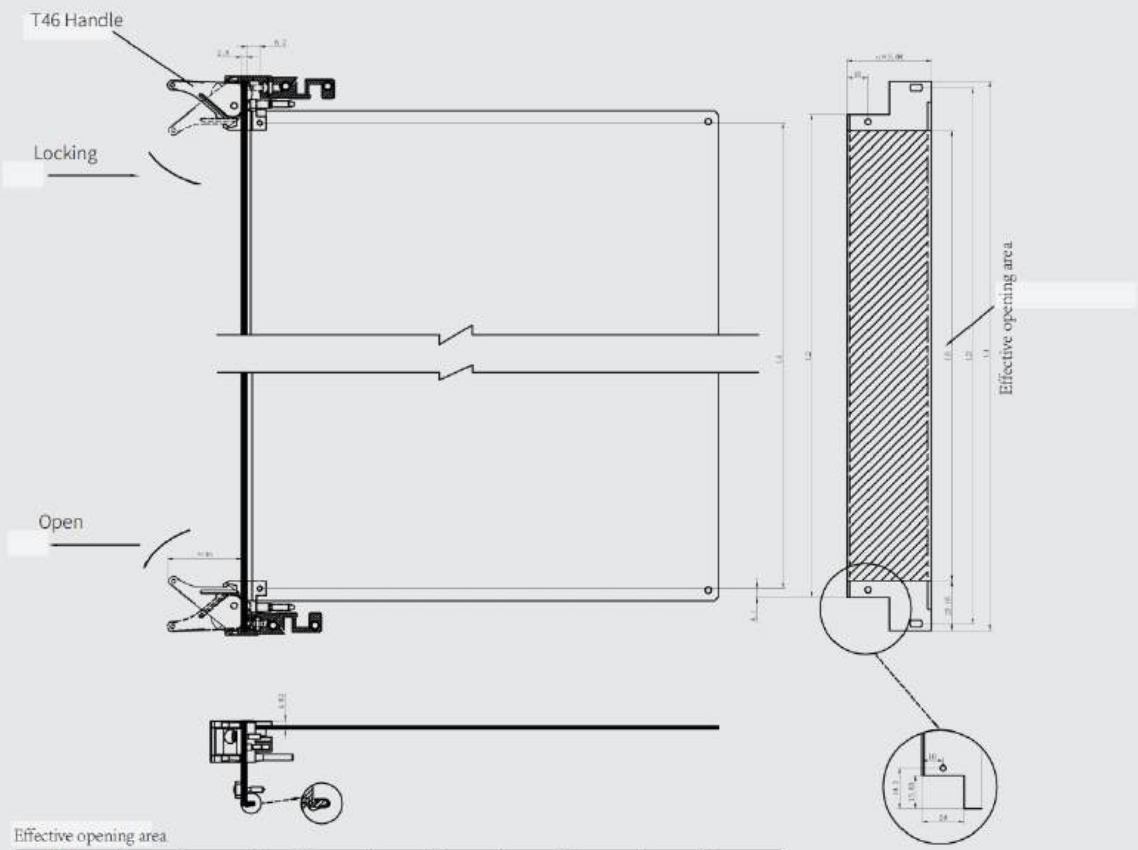

Effective opening area

Height	L1mm	L2mm	L3mm	L4mm	L5mm
3U	128.7	115.4	122.5	88.9	81.7
4U	173.15	159.85	166.95	133.35	126.15
6U	262.05	248.75	255.85	222.25	215.05
9U	395.4	382.1	389.2	355.6	348.4

T46 Panel component

6U Panel component

T46 Handle order information

Width	IPanel	IIPanel	IIIPanel	EMC Gasket	EMC textile gasket	Black handle	Grey handle	Order no
4HP	1			1		1		160404630
4HP		1		1		1		260404630
4HP			1	1		1		360404630
4HP			1		1	1		360404631
4HP	1			1			1	160404640
4HP		1		1			1	260404640
4HP			1	1			1	360404640
4HP			1		1		1	360404641
5HP	1			1		1		160504630
5HP		1		1		1		260504630
5HP			1	1		1		360504630
5HP			1		1	1		360504631
5HP	1			1			1	160504640
5HP		1		1			1	260504640
5HP			1	1			1	360504640
5HP			1		1		1	360504641
6HP	1			1		1		160604630
6HP		1		1		1		260604630
6HP			1	1		1		360604630
6HP			1		1	1		360604631
6HP	1			1			1	160604640
6HP		1		1			1	260604640
6HP			1	1			1	360604640
6HP			1		1		1	360604641
7HP	1			1		1		160704630
7HP		1		1		1		260704630
7HP			1	1		1		360704630
7HP			1		1	1		360704631
7HP	1			1			1	160704640
7HP		1		1			1	260704640
7HP			1	1			1	360704640
7HP			1		1		1	360704641
8HP	1			1		1		160806400
8HP		1		1		1		260804600
8HP			1	1		1		360804600
8HP			1		1	1		360804601
8HP	1			1			1	160804640
8HP		1		1			1	260804640
8HP			1	1			1	360804640
8HP			1		1		1	360804641
10HP	1			1		1		161004600
10HP		1		1		1		261004600
10HP			1	1		1		361004600
10HP			1		1	1		361004601
10HP	1			1			1	161004640
10HP		1		1			1	261004640
10HP			1	1			1	361004640
10HP			1		1		1	361004641
12HP	1			1		1		161204600
12HP		1		1		1		261204600
12HP			1	1		1		361204600
12HP			1		1	1		361204601
12HP	1			1			1	161204640
12HP		1		1			1	261204640
12HP			1	1			1	361204640
12HP			1		1		1	361204641

T46 Panel component

6U Panel component

T46 Offset Handle order information

Width	IPanel	IIPanel	IIIPanel	EMC Gasket	EMC textile gasket	Black handle	Grey handle	Order no
4HP	1			1		1		160414630
4HP		1		1		1		260414630
4HP			1	1		1		360414630
4HP			1		1	1		360414631
4HP	1			1			1	160414640
4HP		1		1			1	260414640
4HP			1	1			1	360414640
4HP			1		1		1	360414641
5HP	1			1		1		160514630
5HP		1		1		1		260514630
5HP			1	1		1		360514630
5HP			1		1	1		360514631
5HP	1			1			1	160514640
5HP		1		1			1	260514640
5HP			1	1			1	360514640
5HP			1		1		1	360514641
6HP	1			1		1		160614630
6HP		1		1		1		260614630
6HP			1	1		1		360614630
6HP			1		1	1		360614631
6HP	1			1			1	160614640
6HP		1		1			1	260614640
6HP			1	1			1	360614640
6HP			1		1		1	360614641
7HP	1			1		1		160714630
7HP		1		1		1		260714630
7HP			1	1		1		360714630
7HP			1		1	1		360714631
7HP	1			1			1	160714640
7HP		1		1			1	260714640
7HP			1	1			1	360714640
7HP			1		1		1	360714641
8HP	1			1		1		160814600
8HP		1		1		1		260814600
8HP			1	1		1		360814600
8HP			1		1	1		360814601
8HP	1			1			1	160814640
8HP		1		1			1	260814640
8HP			1	1			1	360814640
8HP			1		1		1	360814641
10HP	1			1		1		161014600
10HP		1		1		1		261014600
10HP			1	1		1		361014600
10HP			1		1	1		361014601
10HP	1			1			1	161014640
10HP		1		1			1	261014640
10HP			1	1			1	361014640
10HP			1		1		1	361014641
12HP	1			1		1		161214600
12HP		1		1		1		261214600
12HP			1	1		1		361214600
12HP			1		1	1		361214601
12HP	1			1			1	161214640
12HP		1		1			1	261214640
12HP			1	1			1	361214640
12HP			1		1		1	361214641

Offset Handle

Application of Offset Handle

- Most PCB boards in the subracks are soldered with components on the right side, and components can also be soldered on the left side of the PCB board
- When welding the left component, if the left component is>2.1mm and<4.7mm, an offset handle and offset guide rail need to be used
- When using the offset handle and offset guide rail, it is necessary to modify the position of the connectoron the backplane accordingly
- The I-type handle and F-type handle cannot be applied to solder components on the left side of the PCB board. Currently, only the T-type offset handle are applicable

- The following figure is a comparison of the handle, and the dimensions in the figure include 1.6mm of the PCB board

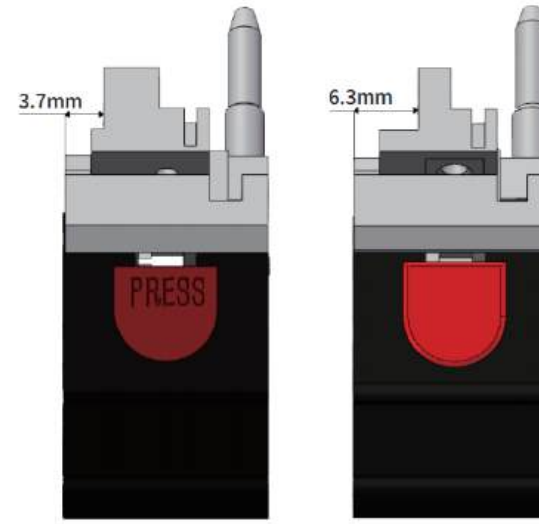

T04 handle

T04 offset handle

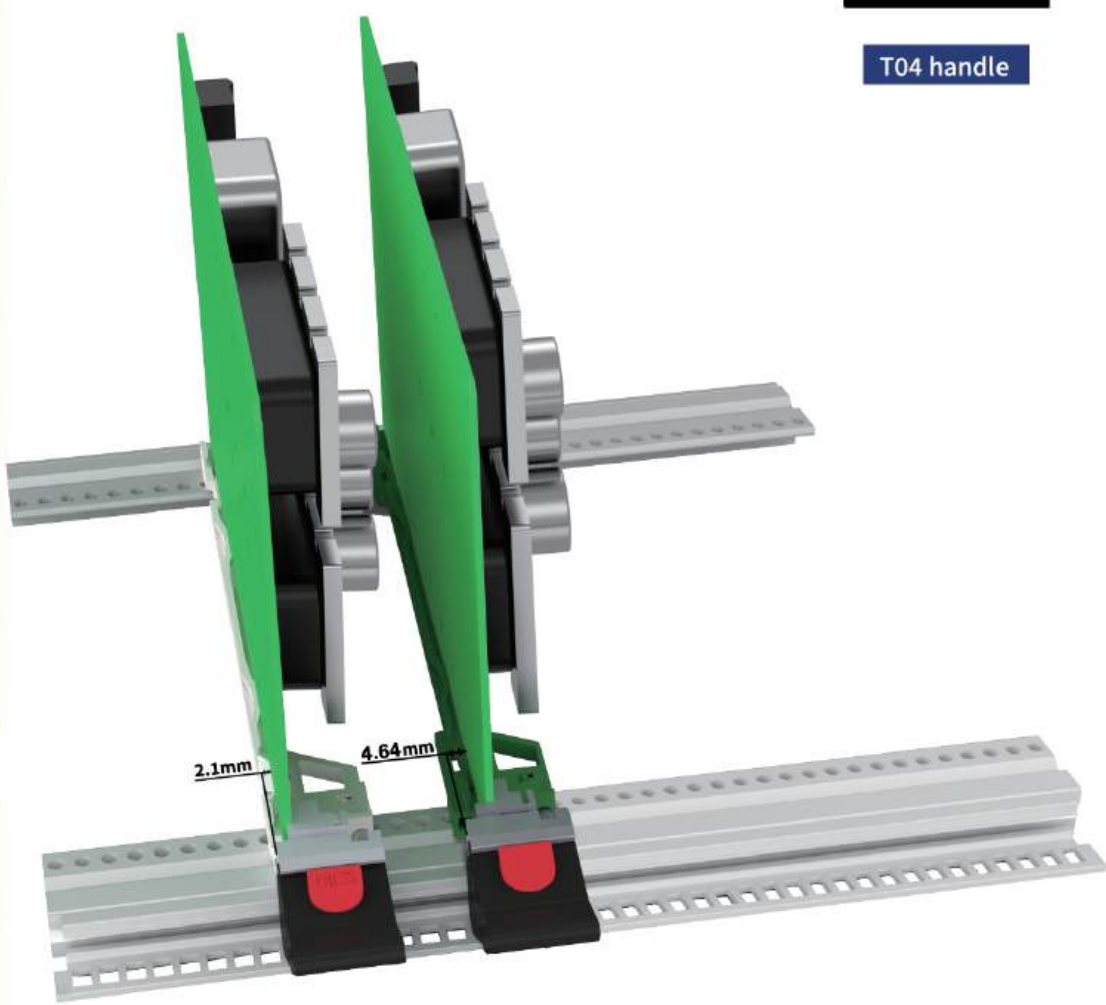

EK+&EG+ PRO Series Subracks Front horizontal Rail

EK+Economic 3U Structure

EK+Economic 3U Structure

Lighit Type EK+ Short Lip、Long Lip EK+、LigheType-T EK+

1. Compliant with IEEE 1101.10 standard
2. The impact and vibration meet the following requirements: GB/T 21563
3. Used in conjunction with the panel for installing the CompactPCI puller
4. Used for the installation of PCB rails
5. A board suitable for high-density connectors
6. Adaptation board size: 100 × 160/220

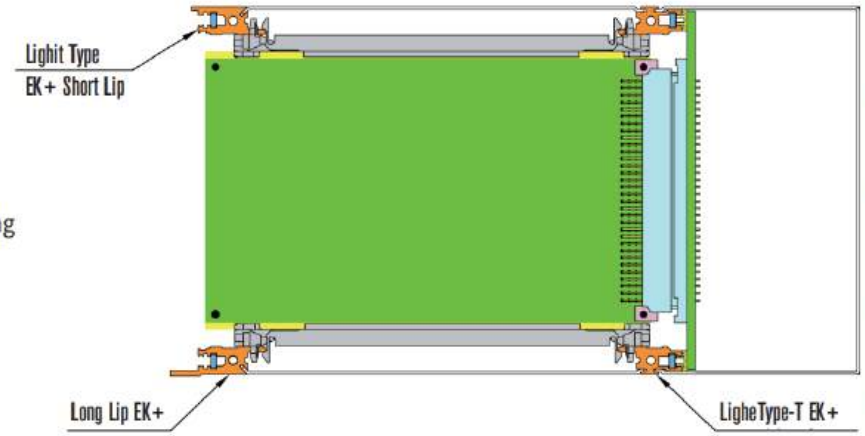

EK+Economic 3U Structure

EK+front beam, EK+J-shaped front beam, EK+rear beam-T

1. Compliant with IEEE 1101.10 standard
2. The impact and vibration meet the following requirements: GB/T 21563
3. Used in conjunction with the panel for installing the CompactPCI puller
4. Used for the installation of PCB rails
5. A board suitable for high-density connectors
6. Adaptation board size: 100 × 160/220
7. Choosing a J-shaped front beam can withstand higher insertion and extraction torque

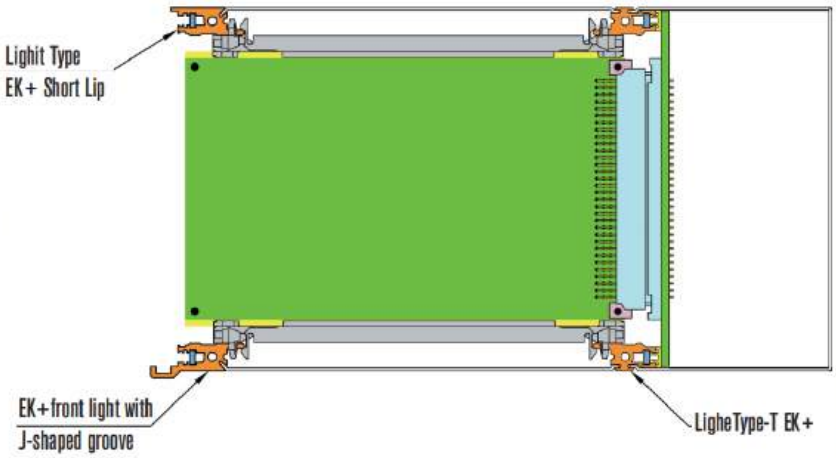

EK+Economic 3U Structure

Lighit Type EK+ Short Lip、LigheType-T EK+

1. The impact and vibration meet the following requirements: GB/T 21563
2. Used for the installation of PCB rails
3. A board suitable for high-density connectors
4. Adaptation board size: 100 × 160/220

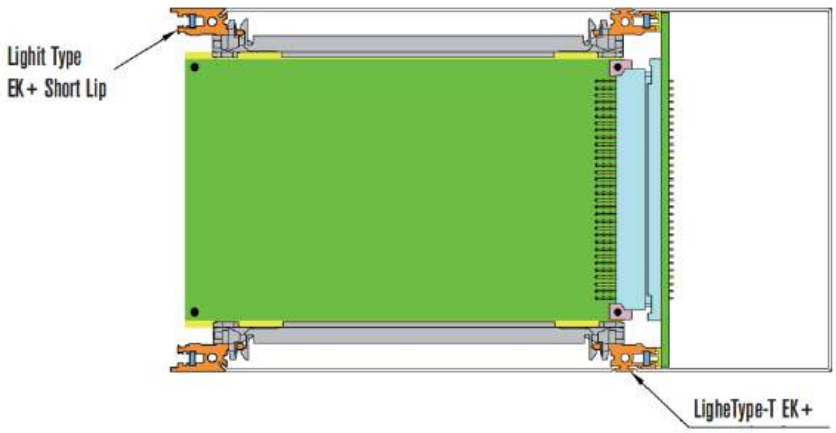

EK+&EG+ PRO Series Subracks
Front horizontal Rail

瑞德科诺 RDEKON

EK+Economic 4U Structure

EK+Economic 4U (3+1U) Structure

Lighit Type EK+ Short Lip、
EK+front light with J-shaped groove、LigheType-T EK+

1. Compliant with IEEE 1101.10 standard
2. The impact and vibration meet the following requirements: GB/T 21563
3. Used in conjunction with the panel for installing the CompactPCI puller
4. Used for the installation of PCB rails
5. A board suitable for high-density connectors
6. Adaptation board size: 100 × 160/22^
7. Choosing a J-shaped front beam can higher insertion and extraction torque

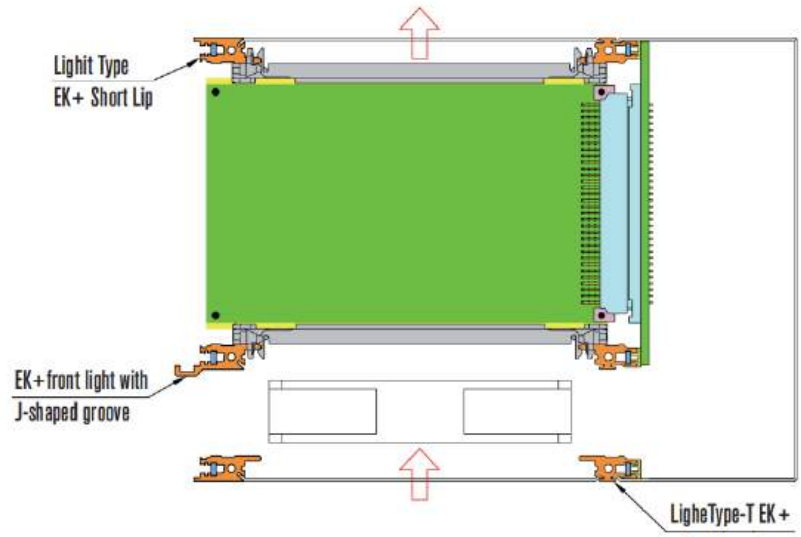

EK+Economic 4U (3+1U) Structure

Lighit Type EK+ Short Lip、Long Lip EK+、
LigheType-T EK+

1. Compliant with IEEE 1101.10 standard
2. The impact and vibration meet the following requir
3. Used in conjunction with the panel for installing the
4. Used for the installation of PCB rails
5. A board suitable for high-density connectors
6. Adaptation board size: 100 × 160/220

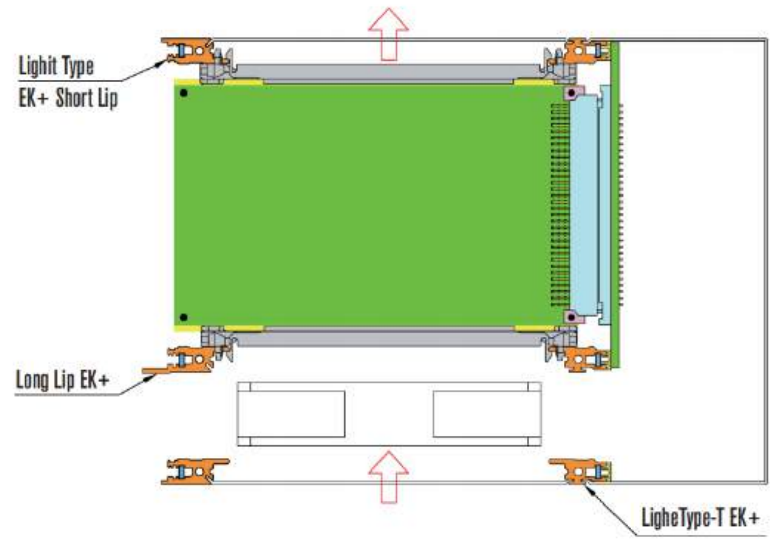

EK+Economic 4U (3+2×1U) Structure

Lighit Type EK+ Short Lip、
EK+front light with J-shaped groove、LigheType EK+

1. Compliant with IEEE 1101.10 standard
2. The impact and vibration meet the following requirements: GB/T 21563
3. Used in conjunction with the panel for installing the CompactPCI puller
4. Used for the installation of PCB rails
5. A board suitable for high-density connectors
6. Adaptation board size: 100 × 160/220
7. Choosing a J-shaped front beam can withstand higher insertion and extraction torque

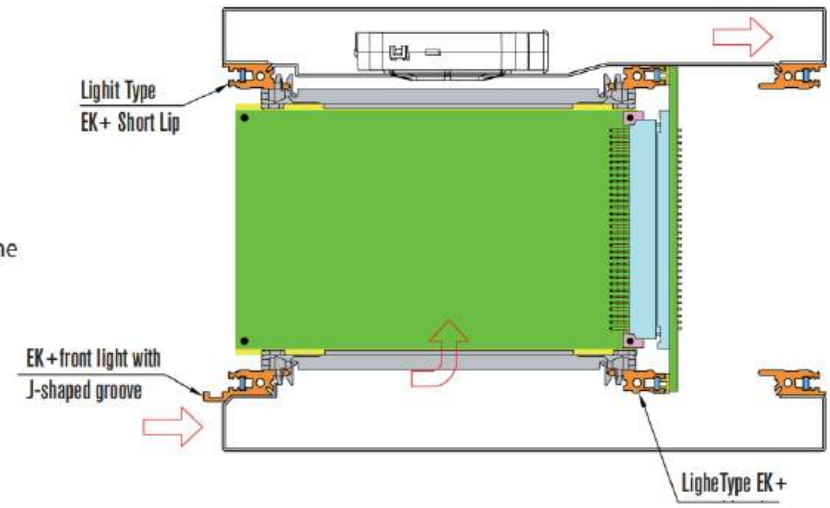

EK+&EG+ PRO Series Subracks Front horizontal Rail

EK+Economic 4U Structure

EK+Economic 4U (3+2×1U) Structure

Lighit Type EK+ Short Lip、
Long Lip EK+、LigheType EK+

1. Compliant with IEEE 1101.10 standard
2. The impact and vibration meet the following requirements: GB/T 21563
3. Used in conjunction with the panel for installing the CompactPCI puller
4. Used for the installation of PCB rails
5. A board suitable for high-density connectors
6. Adaptation board size: 100 × 160/220

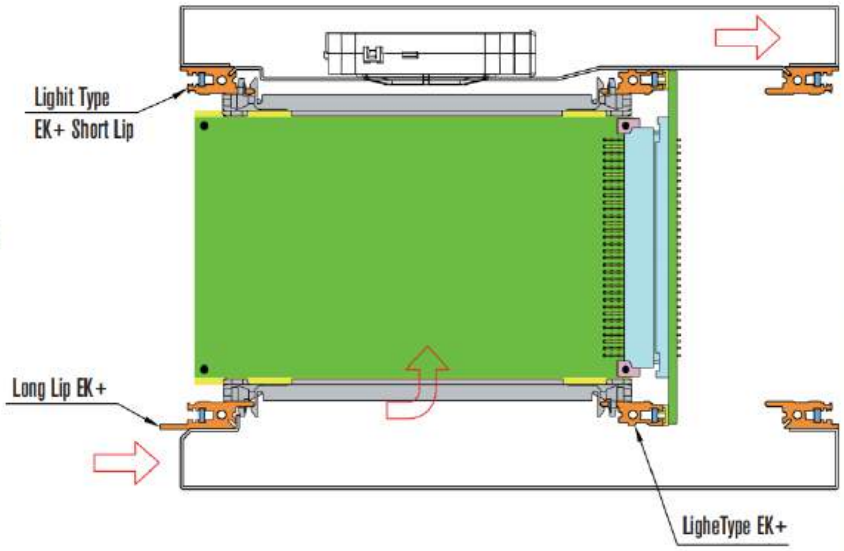

EK+Economic 4U (3+2×1U) Structure

Lighit Type EK+ Short Lip、LigheType EK+

1. The impact and vibration meet the following requirements: GB/T 21563
2. Used for the installation of PCB rails
3. A board suitable for high-density connectors
4. Adaptation board size: 100 × 160/220

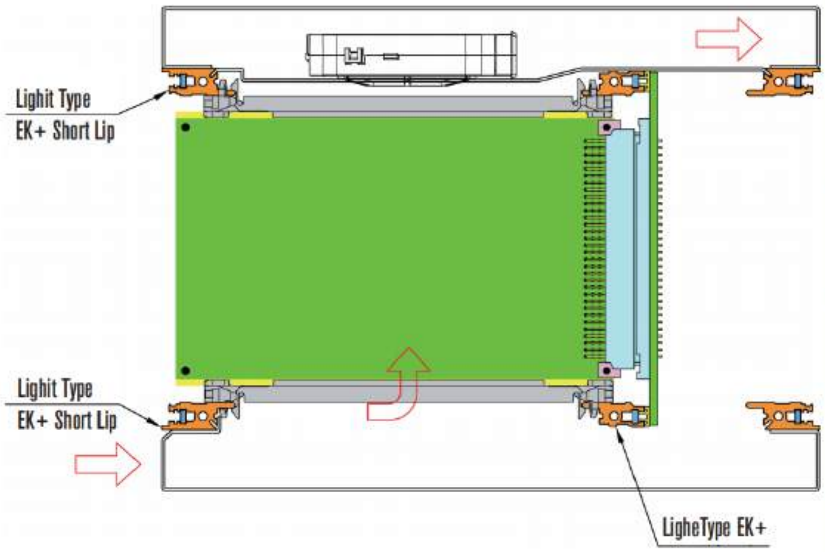

EK+&EG+ PRO Series Subracks Front horizontal Rail

瑞德科诺 RDEKON

EK+Economic 6U Structure

EK+Economic 6U (3+3U) Structure

Lighit Type EK+ Short Lip、Long Lip EK+
J-shaped groove type EK+composite front beam、
LigheType-T EK+、Rear Light Type Rail EK+

1. Compliant with IEEE 1101.10 standard
2. The impact and vibration meet the following requirements: GB/T 21563
3. Used in conjunction with the panel for installing the CompactPCI puller
4. Used for the installation of PCB rails
5. A board suitable for high-density connectors
6. Adaptation board size: 100 × 160/220
7. Choosing a J-shaped front beam can withstand higher insertion and extraction torque

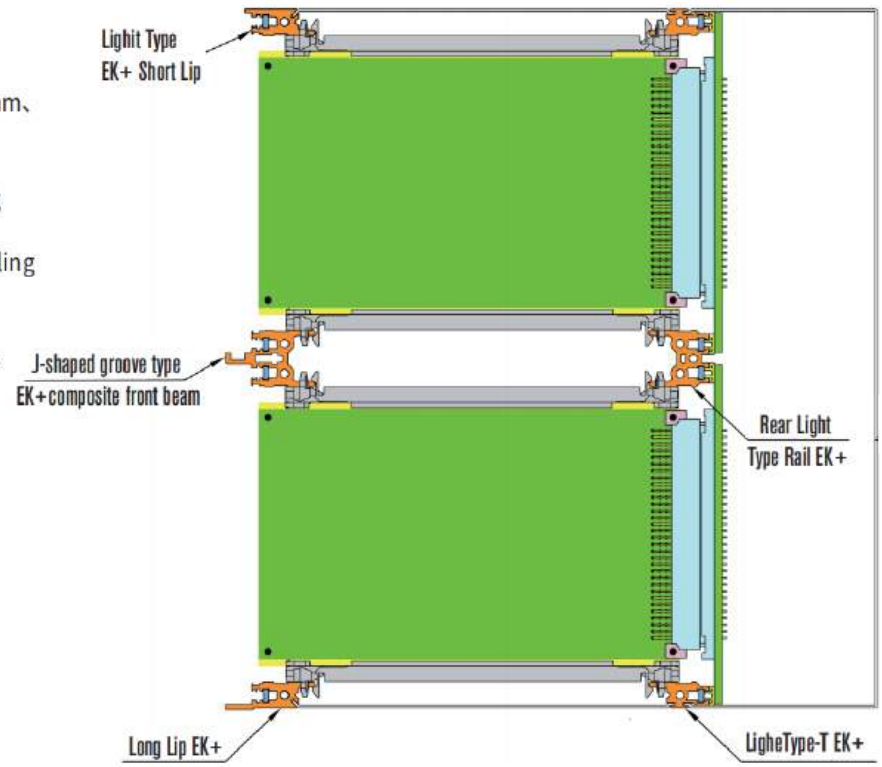

EK+Economic 6U (3+3U) Structure

Lighit Type EK+ Short Lip、Long Lip EK+、
LigheType-T EK+、Rear Light Type Rail EK+

1. Compliant with IEEE 1101.10 standard
2. The impact and vibration meet the following requirements: GB/T 21563
3. Used in conjunction with the panel for installing the CompactPCI puller
4. Used for the installation of PCB rails
5. A board suitable for high-density connectors
6. Adaptation board size: 100 × 160/220

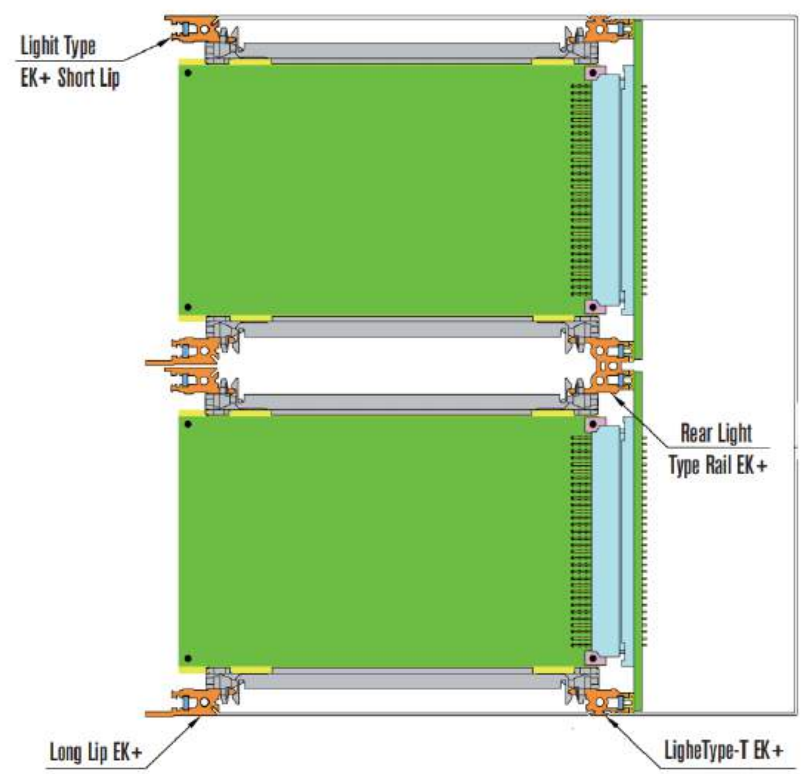

EK+&EG+ PRO Series Subracks
Front horizontal Rail

瑞德科诺 RDEKON

EK+Economic 6U Structure

Lighit Type EK+ Short Lip、
Long Lip EK+ Combination type、Long Lip EK+、
LigheType-T EK+、Rear Light Type Rail EK+

1. Compliant with IEEE 1101.10 standard
2. The impact and vibration meet the following requirements: GB/T 21563
3. Used in conjunction with the panel for installing the CompactPCI puller
4. Used for the installation of PCB rails
5. A board suitable for high-density connectors
6. Adaptation board size: 100 × 160/220

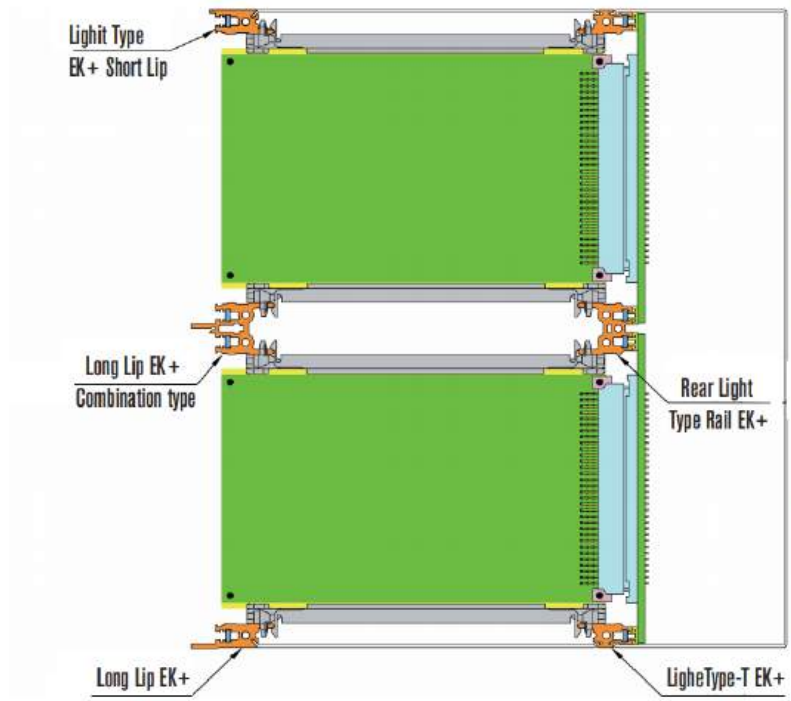

EK+Economic 6U Structure

Lighit Type EK+ Short Lip、Long Lip EK+、
LigheType-T EK+、LigheType EK+

1. Compliant with IEEE 1101.10 standard
2. The impact and vibration meet the following requirements: GB/T 21563
3. Used in conjunction with the panel for installing the CompactPCI puller
4. Used for the installation of PCB rails
5. A board suitable for high-density connectors
6. Adaptation board size: 233.35 × 160/220

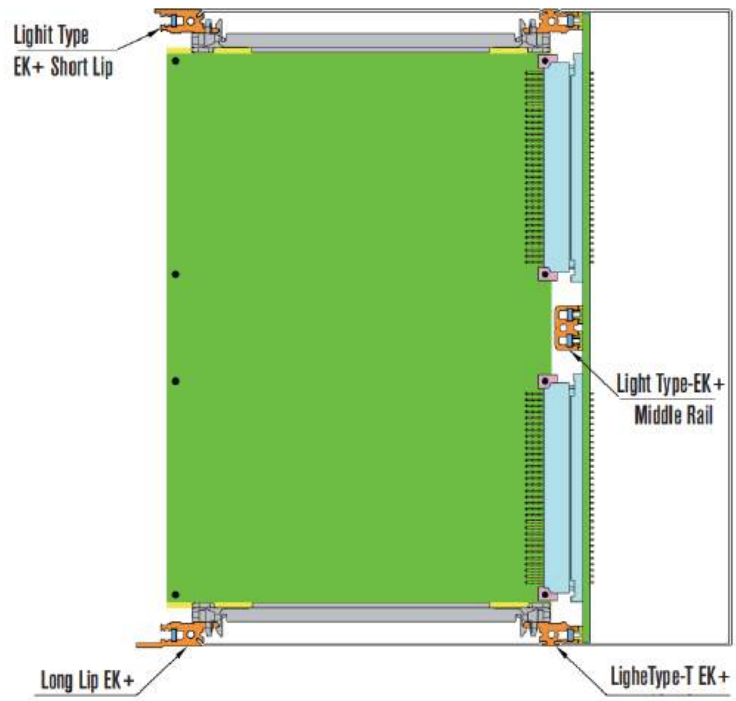

EK+&EG+ PRO Series Subracks Front horizontal Rail

瑞德科诺 RDEKON

EK+Economic 6U Structure

EK+Economic 6U Structure

Lighit Type EK+ Short Lip、Long Lip EK+、LigheType-T EK+、Rear Light Type Rail EK+

1. Compliant with IEEE 1101.10 standard
2. The impact and vibration meet the following requirements: GB/T 21563
3. Used in conjunction with the panel for installing the CompactPCI puller
4. Used for the installation of PCB rails
5. A board suitable for high-density connectors
6. Adaptation board size: 233.35 × 160/220
7. Choosing a J-shaped front beam can withstand higher insertion and extraction torque

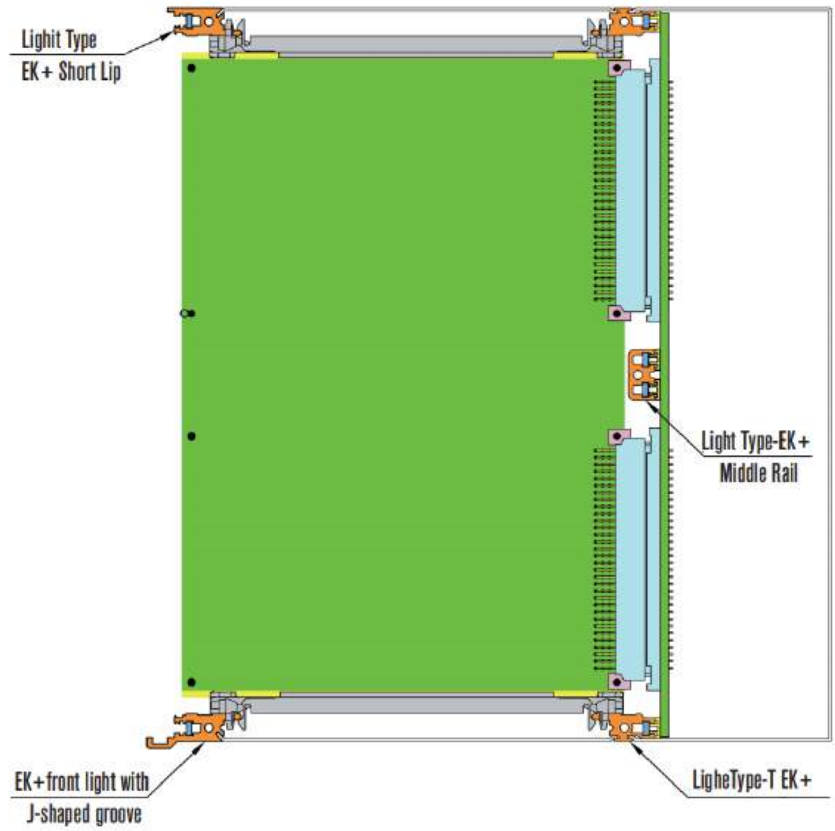

EK+Economic 6U Structure

Lighit Type EK+ Short Lip、LigheType-T EK+、Light Type-EK+ Middle Rail

1. The impact and vibration meet the following requirements: GB/T 21563
2. Used for the installation of PCB rails
3. A board suitable for high-density connectors
4. Adaptation board size: 233.35 × 160/220

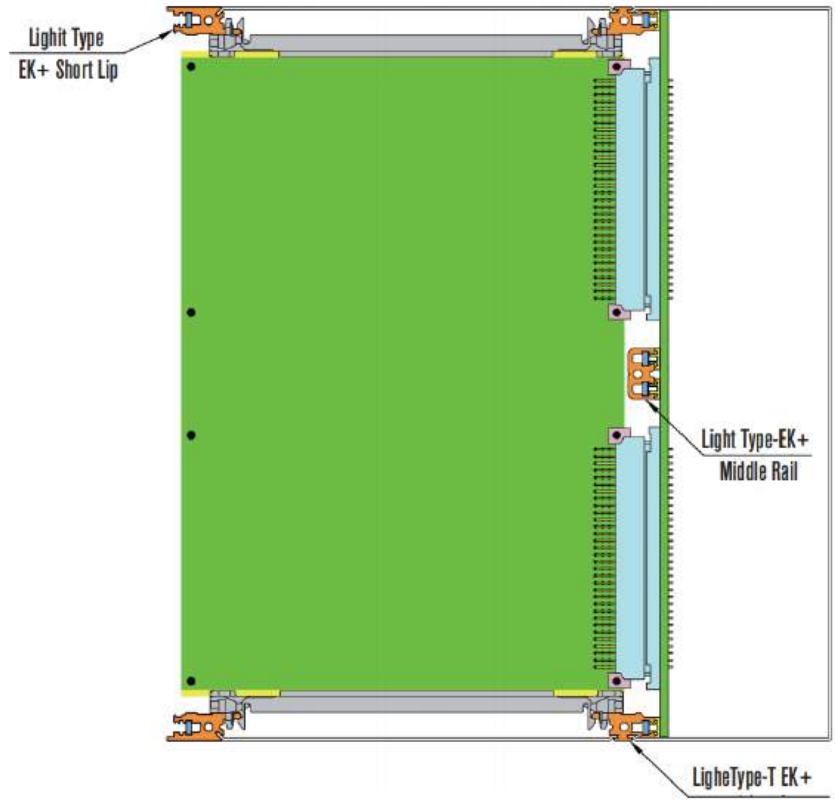

EK+&EG+ PRO Series Subracks Front horizontal Rail

EK+Economic 7U Structure

EK+Economic 7U (6U+1U) Structure

Lighit Type EK+ Short Lip、Long Lip EK+
LigheType-T EK+、Light Type-EK+ Middle Rail

1. Compliant with IEEE 1101.10 standard
2. The impact and vibration meet the following requirements: GB/T 21563
3. Used in conjunction with the panel for installing the CompactPCI puller
4. Used for the installation of PCB rails
5. A board suitable for high-density connectors
6. Adaptation board size: 233.35 × 160/220
7. Choosing a J-shaped front beam can withstand higher insertion and extraction torque

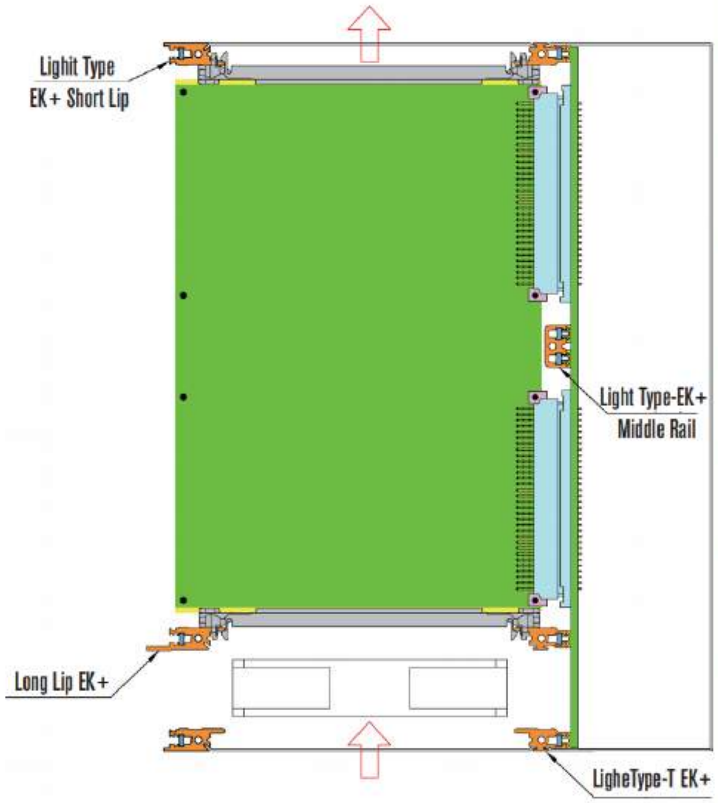

EK+Economic 7U (6U+1U) Structure

Lighit Type EK+ Short Lip、Light Type-EK+ Middle Rail
EK+front light with J-shaped groove、LigheType-T EK+

1. Compliant with IEEE 1101.10 standard
2. The impact and vibration meet the following requirements: GB/T 21563
3. Used in conjunction with the panel for installing the CompactPCI puller
4. Used for the installation of PCB rails
5. A board suitable for high-density connectors
6. Adaptation board size: 233.35 × 160/220

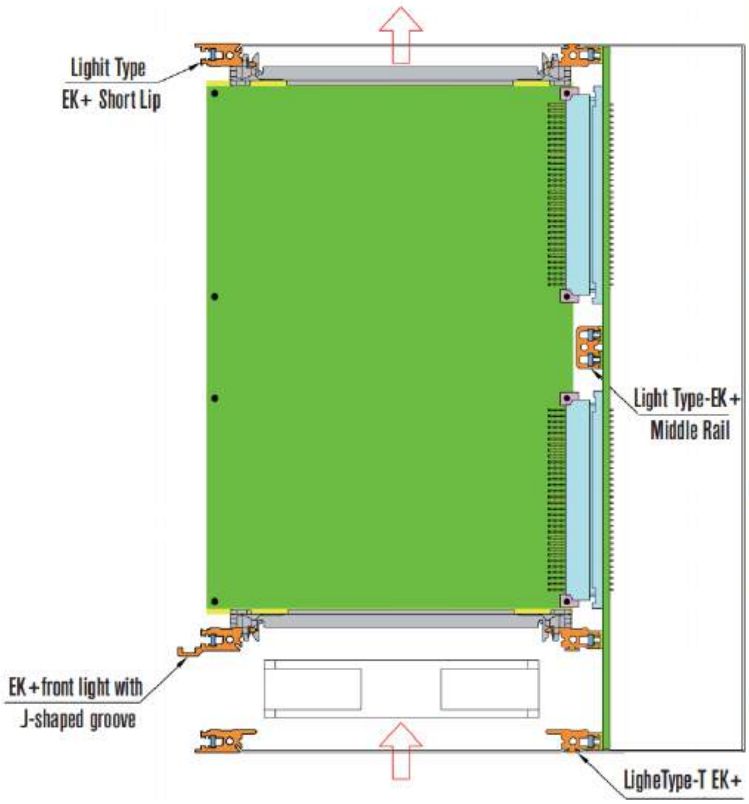

EK+&EG+ PRO Series Subracks
Front horizontal Rail

瑞德科诺 RDEKON

EG+reinforced 3U structure

EG+reinforced 3U structure

Heavy Type EG+ Short Lip-Rugged、
EG+ Heavy Type Long Lip、Heavy Type EG+ Rugged

1. Compliant with IEEE 1101.10 standard
2. The impact and vibration meet the following requirements: GB/T 21563
3. Used in conjunction with the panel for installing the CompactPCI puller
4. Used for the installation of PCB rails
5. A board suitable for high-density connectors
6. Adaptation board size: 100 × 160/220

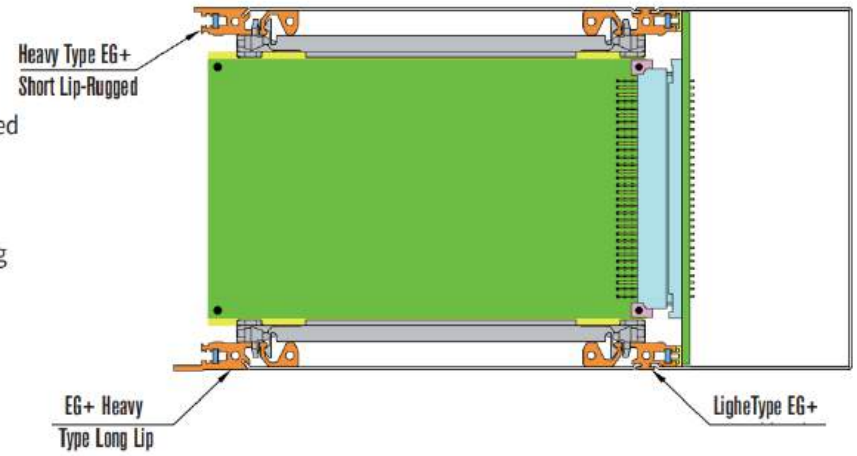

EG+reinforced 3U structure

Heavy Type EG+ Short Lip-Rugged、
EG+front light with J-shaped groove、
Heavy Type EG+ Rugged

1. Compliant with IEEE 1101.10 standard
2. The impact and vibration meet the following requirements: GB/T 21563
3. Used in conjunction with the panel for installing the CompactPCI puller
4. Used for the installation of PCB rails
5. A board suitable for high-density connectors
6. Adaptation board size: 100 × 160/220
7. Choosing a J-shaped front beam can withstand higher insertion and extraction torque

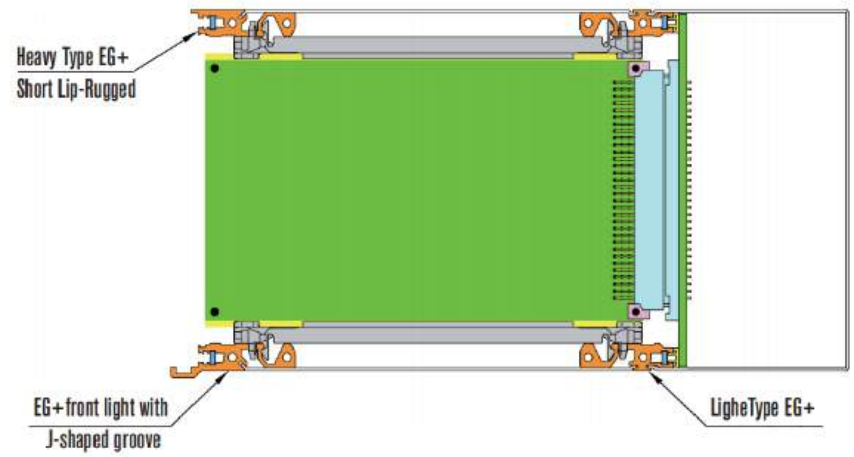

EG+reinforced 3U structure

Heavy Type EG+ Short Lip-Rugged、
Heavy Type EG+ Rugged

1. The impact and vibration meet the following requirements: GB/T 21563
2. Used for the installation of PCB rails
3. A board suitable for high-density connectors
4. Adaptation board size: 100 × 160/220

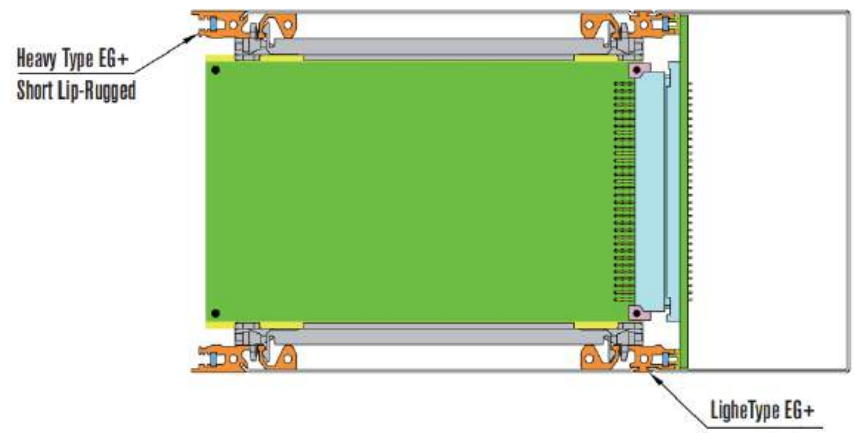

EK+&EG+ PRO Series Subracks Front horizontal Rail

EG+reinforced 4U structure

EG+reinforced 4U (3+1U) structure

Heavy Type EG+ Short Lip-Rugged、
EG+ Heavy Type Long Lip、Heavy Type EG+ Rugged

1. Compliant with IEEE 1101.10 standard
2. The impact and vibration meet the following requirements: GB/T 21563
3. Used in conjunction with the panel for installing the CompactPCI puller
4. Used for the installation of PCB rails
5. A board suitable for high-density connectors
6. Adaptation board size: 100 × 160/220

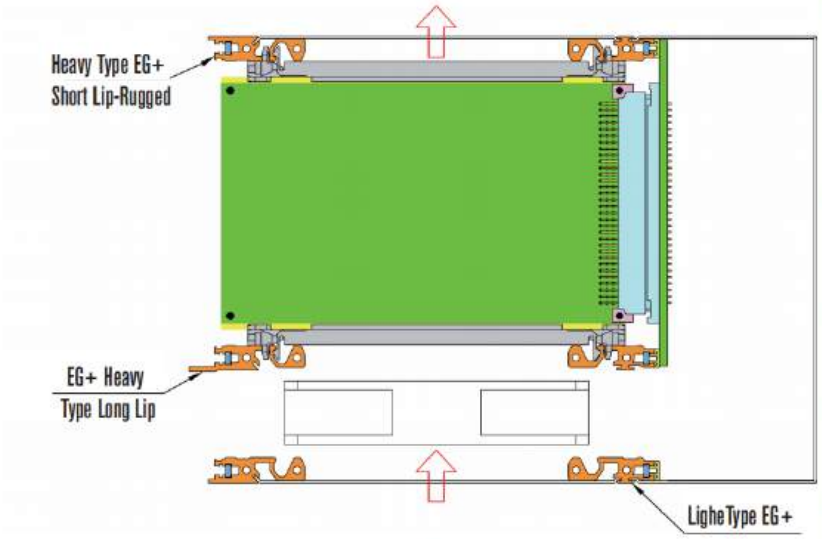

EG+reinforced 4U (3+1U) structure

Heavy Type EG+ Short Lip-Rugged、
EG+front light with J-shaped groove、
Heavy Type EG+ Rugged

1. Compliant with IEEE 1101.10 standard
2. The impact and vibration meet the following requirements: GB/T 21563
3. Used in conjunction with the panel for installing the CompactPCI puller
4. Used for the installation of PCB rails
5. A board suitable for high-density connectors
6. Adaptation board size: 100 × 160/220
7. Choosing a J-shaped front beam can withstand higher insertion and extraction torque

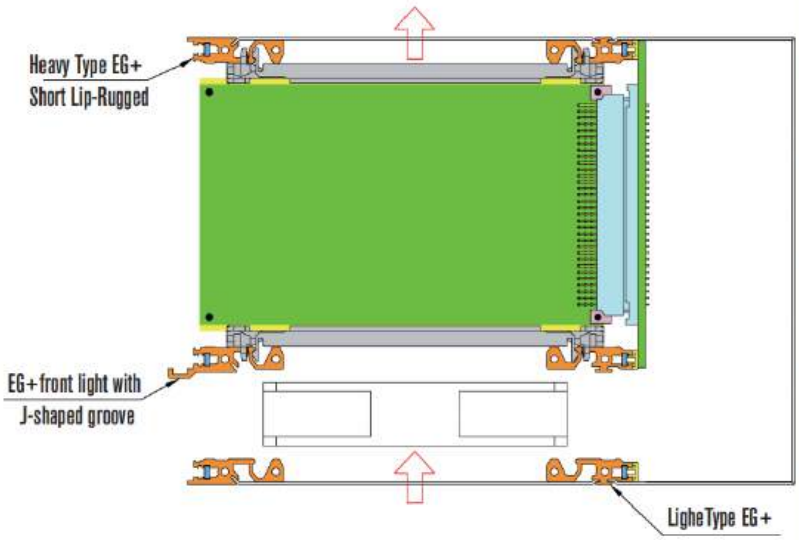

EG+reinforced 4U (3+2 × 1/2U) structure

Heavy Type EG+ Short Lip-Rugged、
EG+front light with J-shaped groove、
Heavy Type EG+ Rugged

1. Compliant with IEEE 1101.10 standard
2. The impact and vibration meet the following requirements: GB/T 21563
3. Used in conjunction with the panel for installing the CompactPCI puller
4. Used for the installation of PCB rails
5. A board suitable for high-density connectors
6. Adaptation board size: 100 × 160/220
7. Choosing a J-shaped front beam can withstand higher insertion and extraction torque

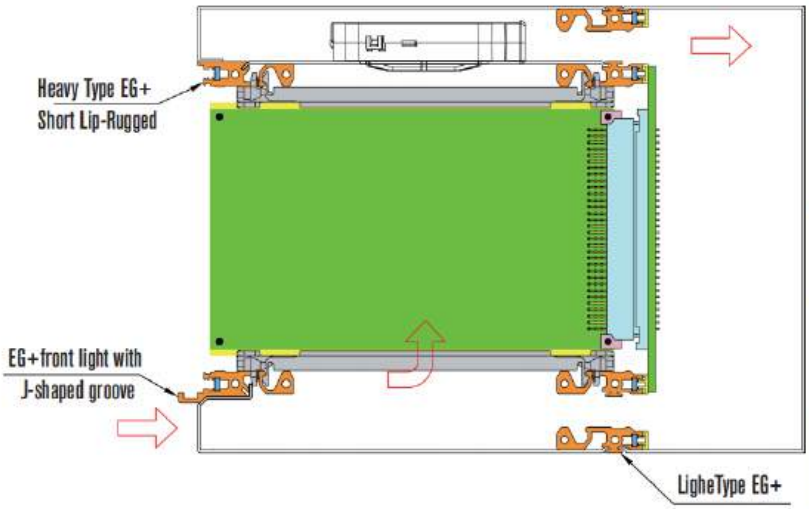

EK+&EG+ PRO Series Subracks
Front horizontal Rail

瑞德科诺 RDEKON

EG+reinforced 4U structure

EG+reinforced 4U (3+2 × 1/2U) structure

Heavy Type EG+ Short Lip-Rugged、
EG+ Heavy Type Long Lip、
Heavy Type EG+ Rugged

1. Compliant with IEEE 1101.10 standard
2. The impact and vibration meet the following requirements: GB/T 21563
3. Used in conjunction with the panel for installing the CompactPCI puller
4. Used for the installation of PCB rails
5. A board suitable for high-density connectors
6. Adaptation board size: 100 × 160/220

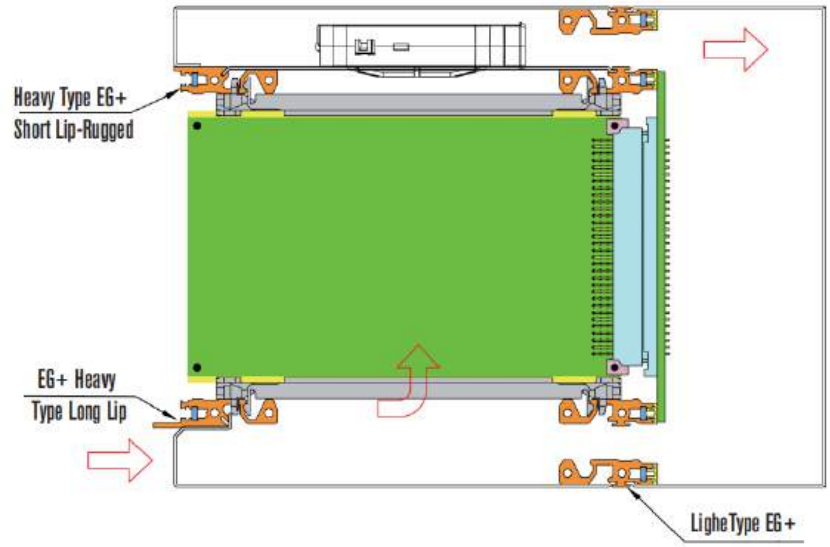

EG+reinforced 4U (3+2 × 1/2U) structure

Heavy Type EG+ Short Lip-Rugged、
Heavy Type EG+ Rugged

1. The impact and vibration meet the following requirements: GB/T 21563
2. Used for the installation of PCB rails
3. A board suitable for high-density connectors
4. Adaptation board size: 100 × 160/220

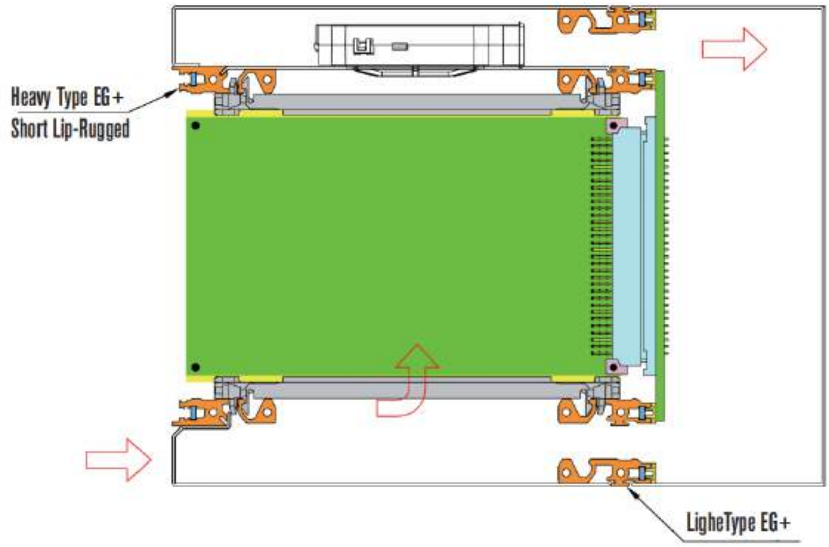

EK+&EG+ PRO Series Subracks
Front horizontal Rail

EG+reinforced 6U structure

EG+reinforced 6U (3U+3U) structure

Heavy Type EG+ Short Lip-Rugged、
J-shaped groove type EK+composite front beam、
EG+ Heavy Type Long Lip、Heavy Type EG+ Rugged
Rear Light Type Rail EK+

1. Compliant with IEEE 1101.10 standard
2. The impact and vibration meet the following requirements: GB/T 21563
3. Used in conjunction with the panel for installing the CompactPCI puller
4. Used for the installation of PCB rails
5. A board suitable for high-density connectors
6. Adaptation board size: 100 × 160/220
7. Choosing a J-shaped front beam can withstand higher insertion and extraction torque

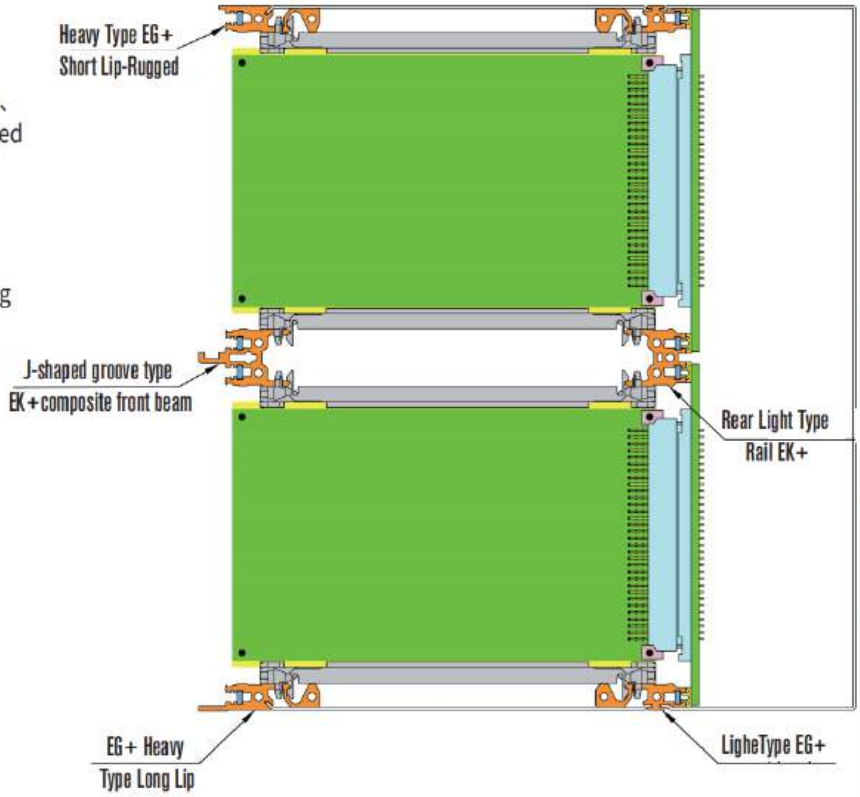

EG+reinforced 6U (3U+3U) structure

Heavy Type EG+ Short Lip-Rugged、
EG+ Heavy Type Long Lip、Heavy Type EG+ Rugged
Rear Light Type Rail EK+

1. Compliant with IEEE 1101.10 standard
2. The impact and vibration meet the following requirements: GB/T 21563
3. Used in conjunction with the panel for installing the CompactPCI puller
4. Used for the installation of PCB rails
5. A board suitable for high-density connectors
6. Adaptation board size: 100 × 160/220

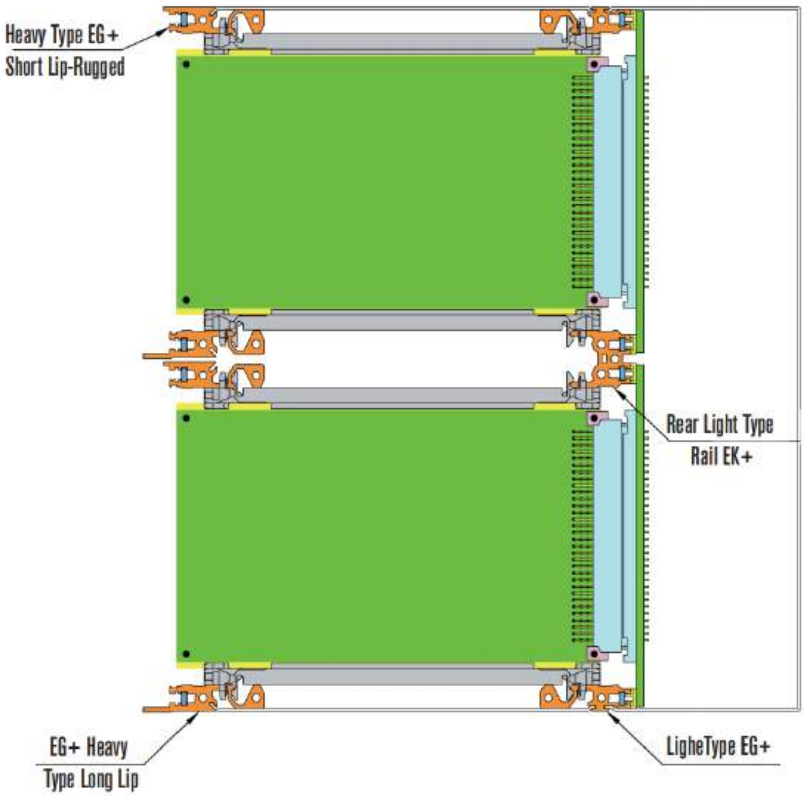

EK+&EG+ PRO Series Subracks Front horizontal Rail

瑞德科诺 RDEKON

EG+reinforced 6U structure

EG+reinforced 6U (3U+3U) structure

Heavy Type EG+ Short Lip-Rugged
Long Lip EK+ Combination type
EG+ Heavy Type Long Lip、Heavy Type EG+ Rugged
Rear Light Type Rail EK+

1. Compliant with IEEE 1101.10 standard
2. The impact and vibration meet the following requirements: GB/T 21563
3. Used in conjunction with the panel for installing the CompactPCI puller
4. Used for the installation of PCB rails
5. A board suitable for high-density connectors
6. Adaptation board size: 100 × 160/220

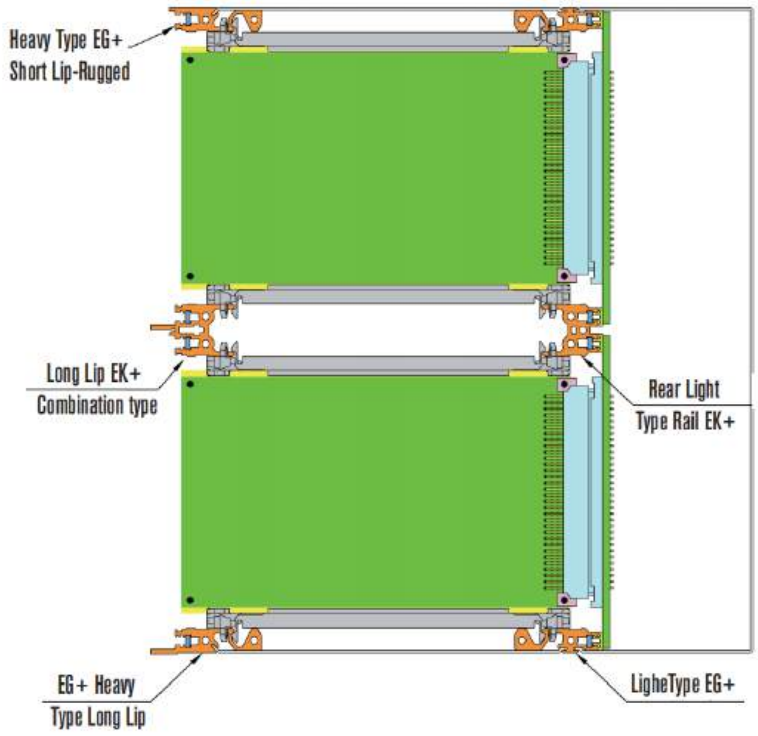

EG+reinforced 6U structure

Heavy Type EG+ Short Lip-Rugged、
EG+front light with J-shaped groove、
Heavy Type EG+ Rugged、Light Type-EK+ Middle Rail

1. Compliant with IEEE 1101.10 standard
2. The impact and vibration meet the following requirements: GB/T 21563
3. Used in conjunction with the panel for installing the CompactPCI puller
4. Used for the installation of PCB rails
5. A board suitable for high-density connectors
6. Adaptation board size: 233.35 × 160/220
7. Choosing a J-shaped front beam can withstand higher insertion and extraction torque

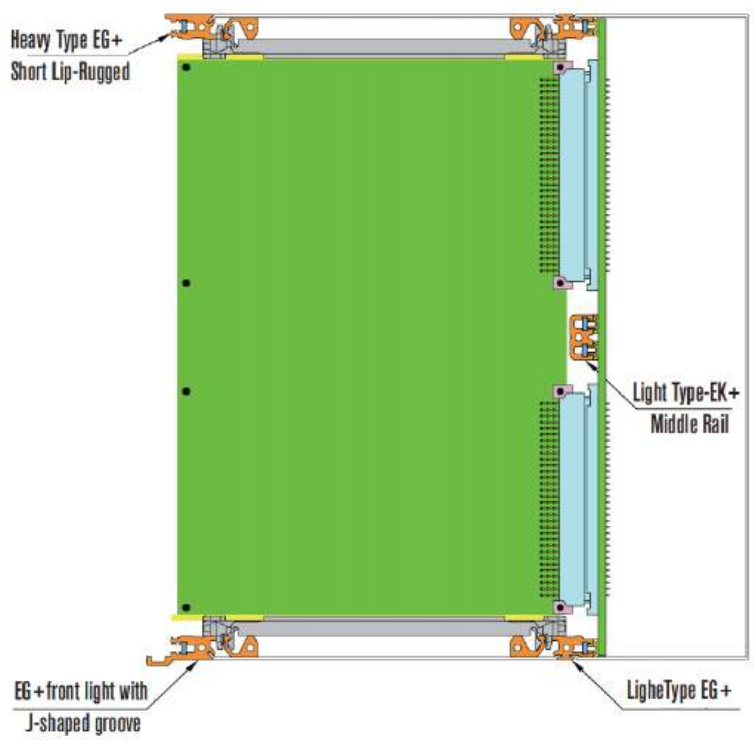

EK+&EG+ PRO Series Subracks
Front horizontal Rail

EG+reinforced 6U structure

EG+reinforced 6U structure

Heavy Type EG+ Short Lip-Rugged、
EG+ Heavy Type Long Lip、Heavy Type EG+ Rugged
Light Type-EK+ Middle Rail

1. Compliant with IEEE 1101.10 standard
2. The impact and vibration meet the following requirements: GB/T 21563
3. Used in conjunction with the panel for installing the CompactPCI puller
4. Used for the installation of PCB rails
5. A board suitable for high-density connectors
6. Adaptation board size: 233.35 × 160/220

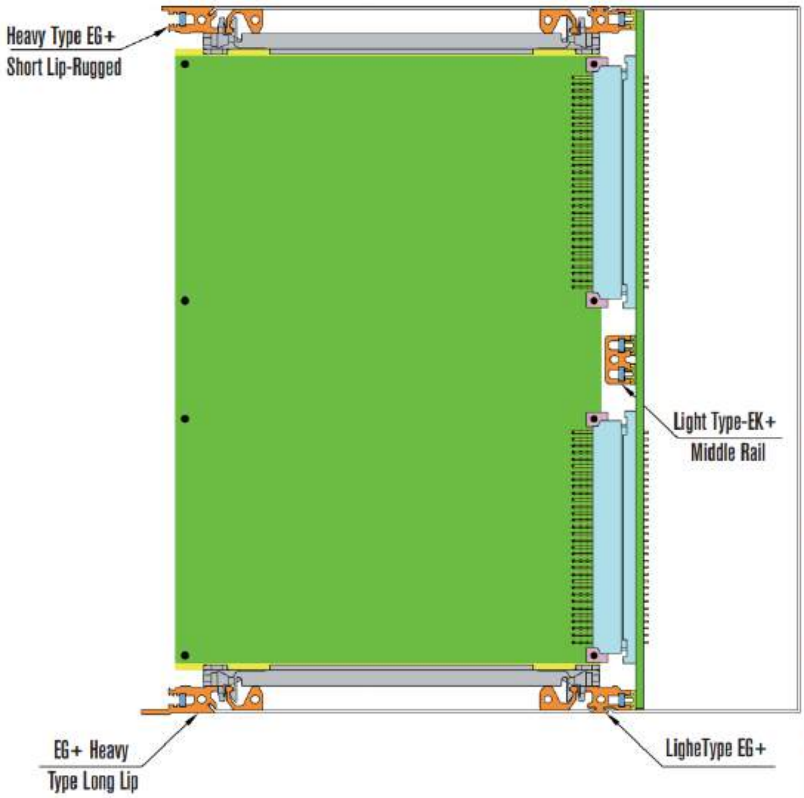

EG+reinforced 6U structure

Heavy Type EG+ Short Lip-Rugged
Heavy Type EG+ Rugged
Light Type-EK+ Middle Rail

1. The impact and vibration meet the following requirements: GB/T 21563
2. Used for the installation of PCB rails
3. A board suitable for high-density connectors
4. Adaptation board size: 233.35 × 160/220

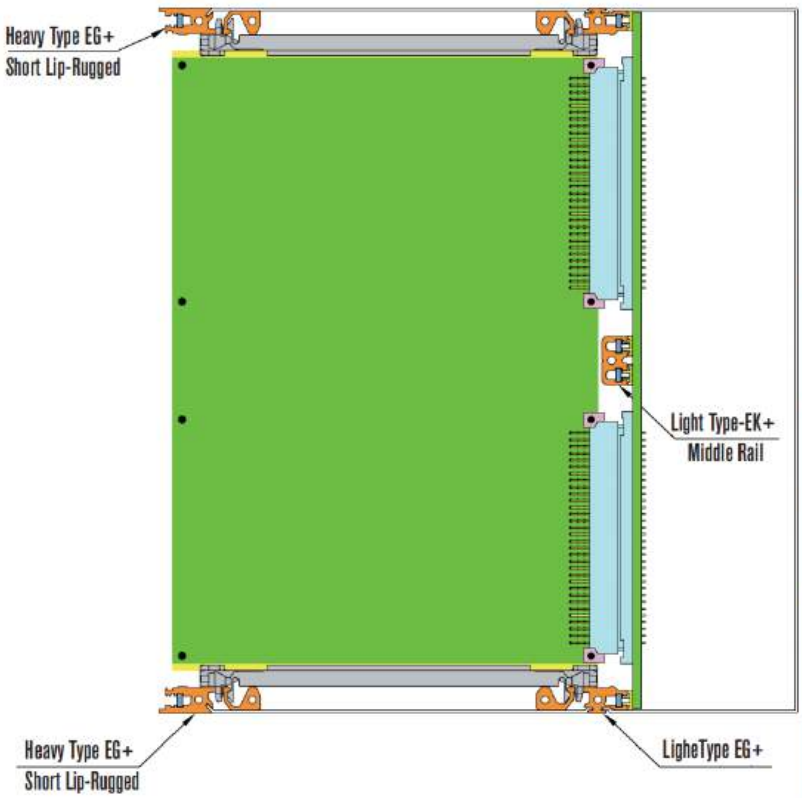

EK+&EG+ PRO Series Subracks Front horizontal Rail

EG+reinforced 7U structure

EG+reinforced 7U(6U+1U) structure

Heavy Type EG+ Short Lip-Rugged、
EG+front light with J-shaped groove、
Heavy Type EG+ Rugged、Light Type-EK+ Middle Rail

1. Compliant with IEEE 1101.10 standard
2. The impact and vibration meet the following requirements: GB/T 21563
3. Used in conjunction with the panel for installing the CompactPCI puller
4. Used for the installation of PCB rails
5. A board suitable for high-density connectors
6. Adaptation board size: 233.35 × 160/220
7. Choosing a J-shaped front beam can withstand higher insertion and extraction torque

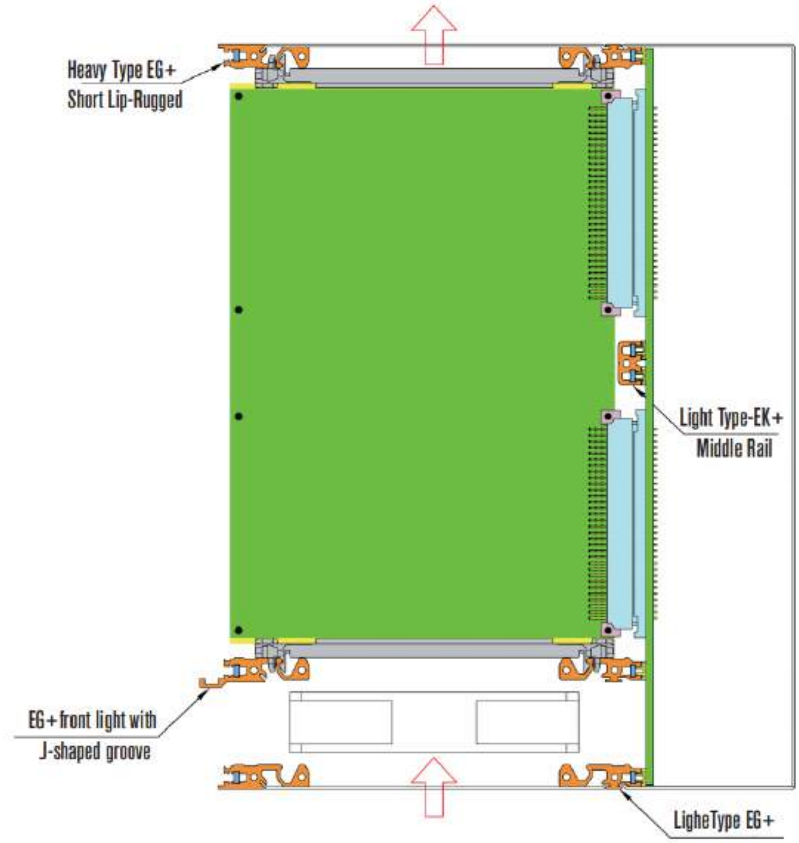

EG+reinforced 7U(6U+1U) structure

EG+ Heavy Type Long Lip、Heavy Type EG+ Rugged
Heavy Type EG+ Short Lip-Rugged
Light Type-EK+ Middle Rail

1. Compliant with IEEE 1101.10 standard
2. The impact and vibration meet the following requirements: GB/T 21563
3. Used in conjunction with the panel for installing the CompactPCI puller
4. Used for the installation of PCB rails
5. A board suitable for high-density connectors
6. Adaptation board size: 233.35 × 160/220

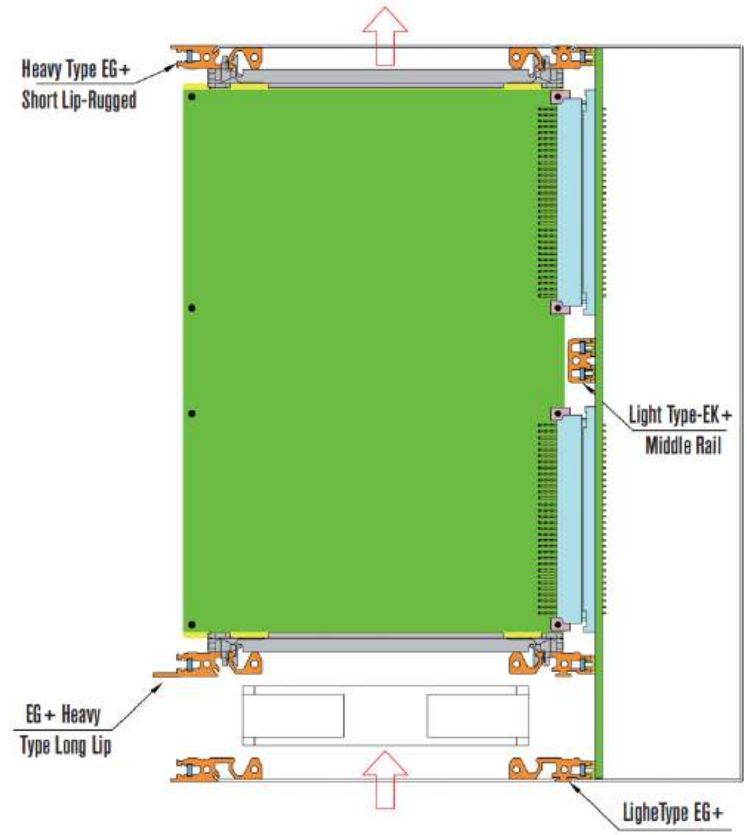

BEK 3U structure

BEK 3U structure

Lighit Type-BEK Short Lip、LigheType-BEK

1. The impact and vibration meet the following requirements: GB/T 21563
2. Used for the installation of PCB rails
3. A board suitable for high-density connectors
4. Adaptation board size: 100 × 160/220

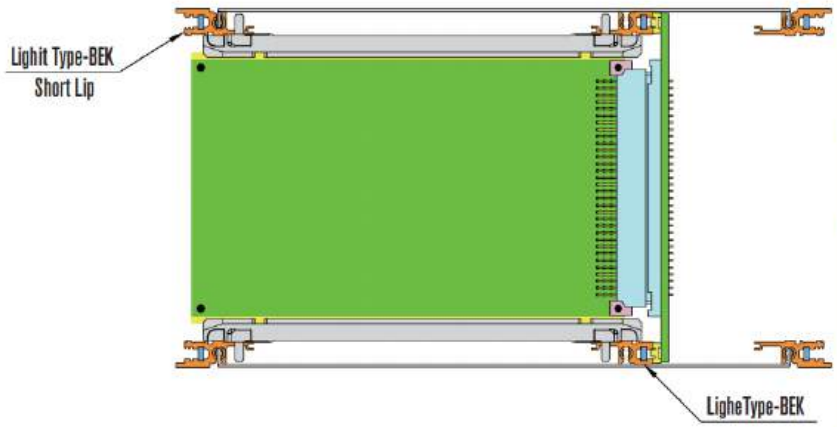

BEK 3U structure

Lighit Type-BEK Short Lip、BEK-Long Lip
LigheType-BEK

1. Compliant with IEEE 1101.10 standard
2. The impact and vibration meet the following requirements: GB/T 21563
3. Used in conjunction with the panel for installing the CompactPCI puller
4. Used for the installation of PCB rails
5. A board suitable for high-density connectors
6. Adaptation board size: 100 × 160/220

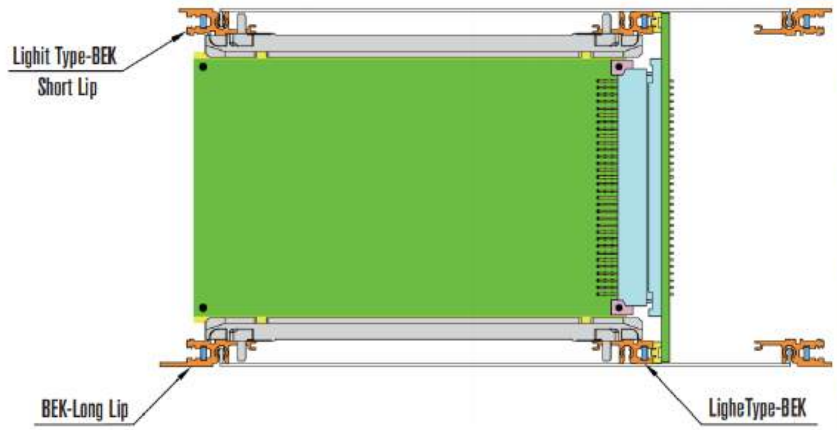

BEK 3U structure

Lighit Type-BEK Short Lip、
BEK With integral Z rail Rear rails

1. The impact and vibration meet the following requirements: GB/T 21563
2. Used for the installation of PCB rails
3. A board suitable for high-density connectors
4. Adaptation board size: 100 × 160/220

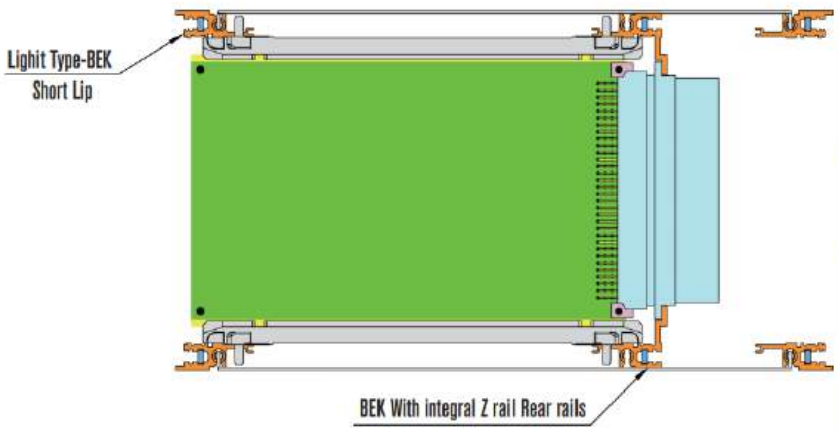

BEK 3U、4U structure

BEK 3U structure

Lighit Type-BEK Short Lip、BEK-Long Lip
BEK With integral Z rail Rear rails

1. Compliant with IEEE 1101.10 standard
2. The impact and vibration meet the following requirements: GB/T 21563
3. Used in conjunction with the panel for installing the CompactPCI puller
4. Used for the installation of PCB rails
5. A board suitable for high-density connectors
6. Adaptation board size: 100 × 160/220

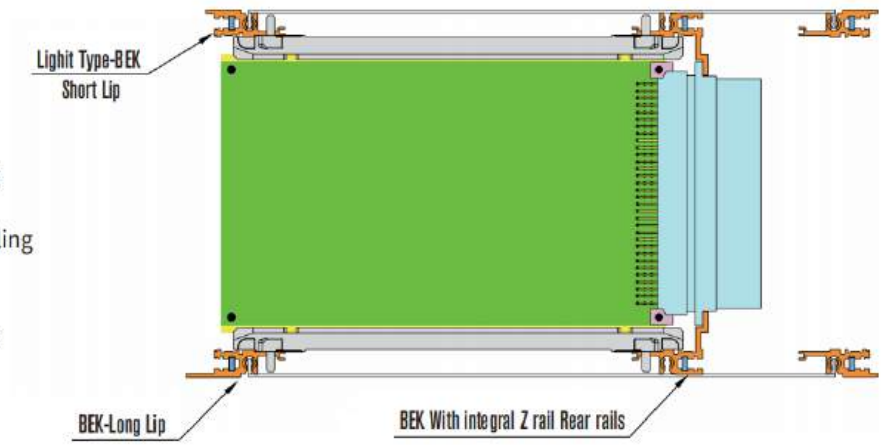

BEK 4U (3U+1U) structure

Lighit Type-BEK Short Lip、LigheType-BEK
J-shaped groove type BEG composite front beam

1. Compliant with IEEE 1101.10 standard
2. The impact and vibration meet the following requirements: GB/T 21563
3. Used in conjunction with the panel for installing the CompactPCI puller
4. Used for the installation of PCB rails
5. A board suitable for high-density connectors
6. Adaptation board size: 100 × 160/220
7. Choosing a J-shaped front beam can withstand higher insertion and extraction torque

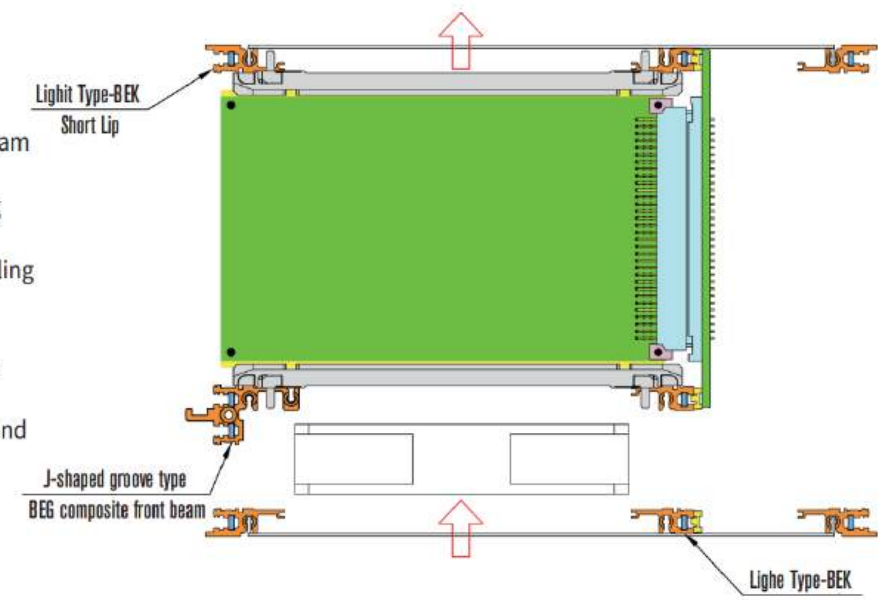

BEK 4U (3U+1U) structure

Lighit Type-BEK Short Lip、Lighe Type-BEK

1. The impact and vibration meet the following requirements: GB/T 21563
2. Used for the installation of PCB rails
3. A board suitable for high-density connectors
4. Adaptation board size: 100 × 160/220

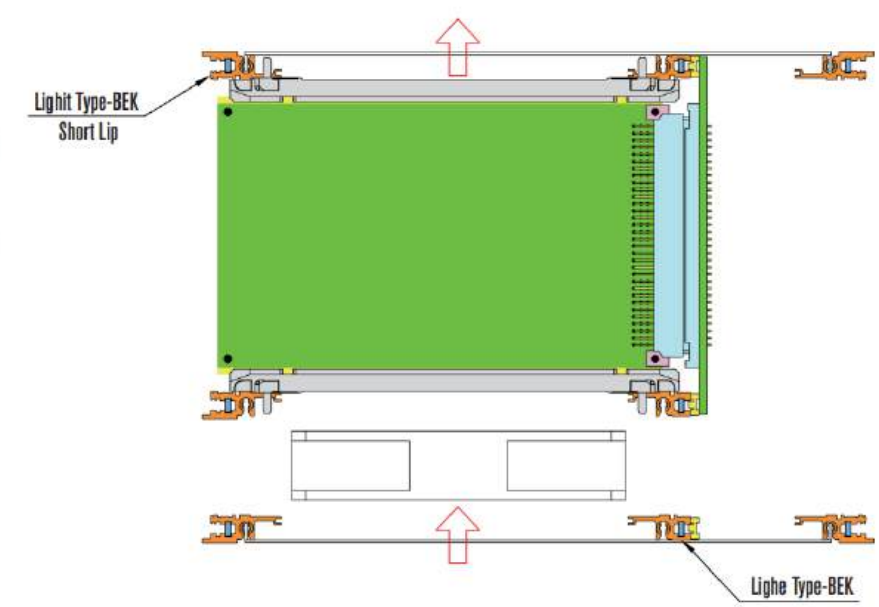

BEK&BEG PRO Series Subracks Front horizontal Rail

BEK 6U structure

BEK 6U (3U+3U) structure

Lighit Type-BEK Short Lip、
J-shaped groove type BEG composite front beam、
Front and Rear Rail、BEK-Long Lip、Lighe Type-BEK

1. Compliant with IEEE 1101.10 standard
2. The impact and vibration meet the following requirements: GB/T 21563
3. Used in conjunction with the panel for installing the CompactPCI puller
4. Used for the installation of PCB rails
5. A board suitable for high-density connectors
6. Adaptation board size: 100 × 160/220
7. Choosing a J-shaped front beam can withstand higher insertion and extraction torque

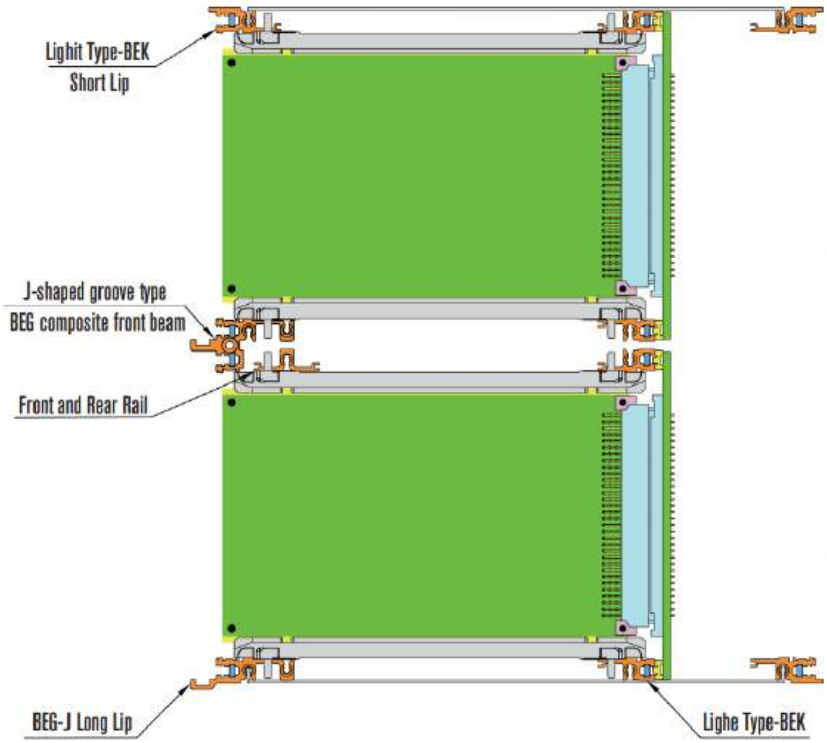

BEK 6U (3U+3U) structure

Lighit Type-BEK Short Lip、BEK-Long Lip、
Lighe Type-BEK-Z

1. Compliant with IEEE 1101.10 standard
2. The impact and vibration meet the following requirements: GB/T 21563
3. Used in conjunction with the panel for installing the CompactPCI puller
4. Used for the installation of PCB rails
5. A board suitable for high-density connectors
6. Adaptation board size: 100 × 160/220
7. The rear beam is used for directly installing the backplate (without insulation strips)

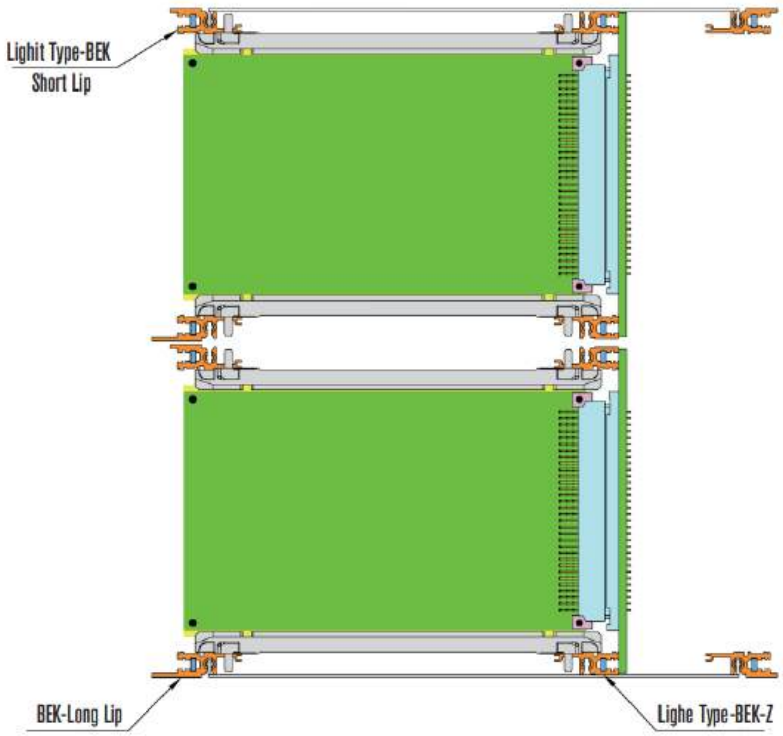

BEK&BEG PRO Series Subracks
Front horizontal Rail

瑞德科诺 RDEKON

BEK 6U structure

BEK 6U(3U+3U) structure

Lighit Type-BEK Short Lip、
BEK-Long Lip、BEK With integral Z rail Rear rails

1. Compliant with IEEE 1101.10 standard
2. The impact and vibration meet the following requirements: GB/T 21563
3. Used in conjunction with the panel for installing the CompactPCI puller
4. Used for the installation of PCB rails
5. A board suitable for high-density connectors
6. Adaptation board size: 100 × 160/220

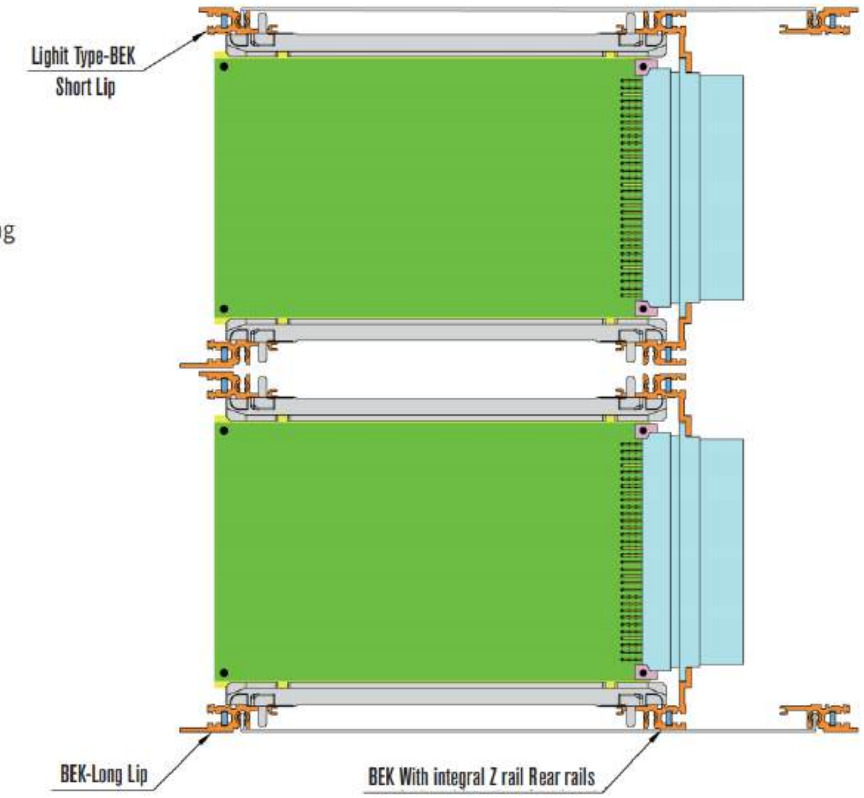

BEK 6U(3U+3U) structure

Lighit Type-BEK Short Lip、BEK-Long Lip
J-shaped groove type BEG composite front beam、
Front and Rear Rail、Lighe Type-BEK-Z

1. Compliant with IEEE 1101.10 standard
2. The impact and vibration meet the following requirements: GB/T 21563
3. Used in conjunction with the panel for installing the CompactPCI puller
4. Used for the installation of PCB rails
5. A board suitable for high-density connectors
6. Adaptation board size: 100 × 160/220
7. Choosing a J-shaped front beam can withstand higher insertion and extraction torque
8. The rear beam is used for directly installing the backplate (without insulation strips)

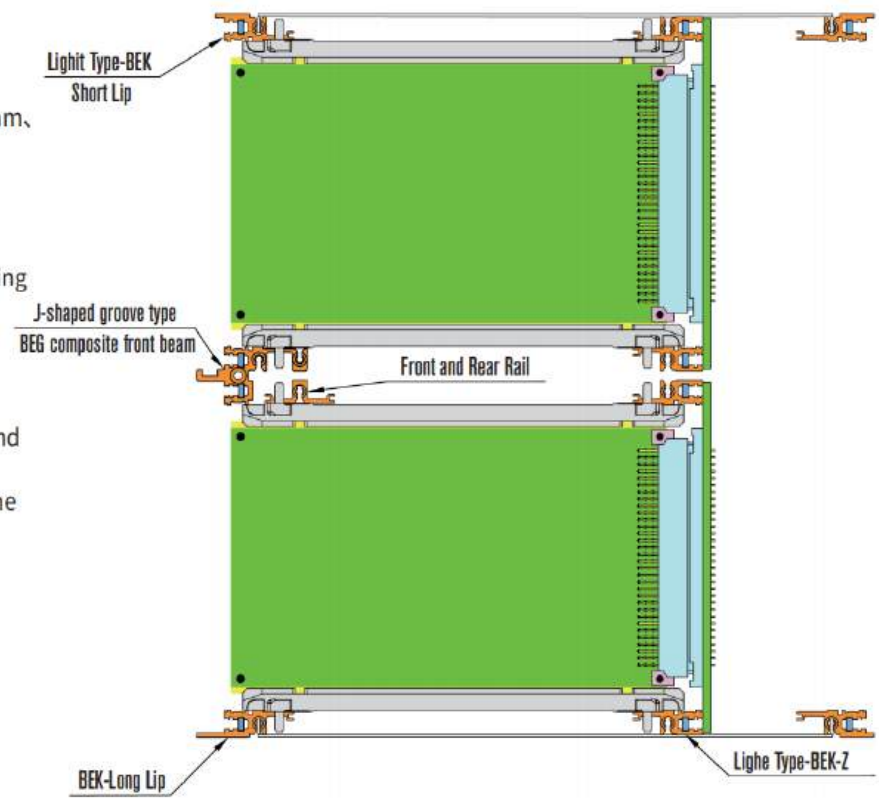

BEK 6U structure

BEK 6U structure

Lighit Type-BEK Short Lip、Lighe Type-BEK-Z、Light Type BEK-Z Middle Rail

1. The impact and vibration meet the following requirements: GB/T 21563
2. Used for the installation of PCB rails
3. A board suitable for high-density connectors
4. Adaptation board size: 233.35 × 160/220
5. The rear beam is used for directly installing the backplate (without insulation strips)

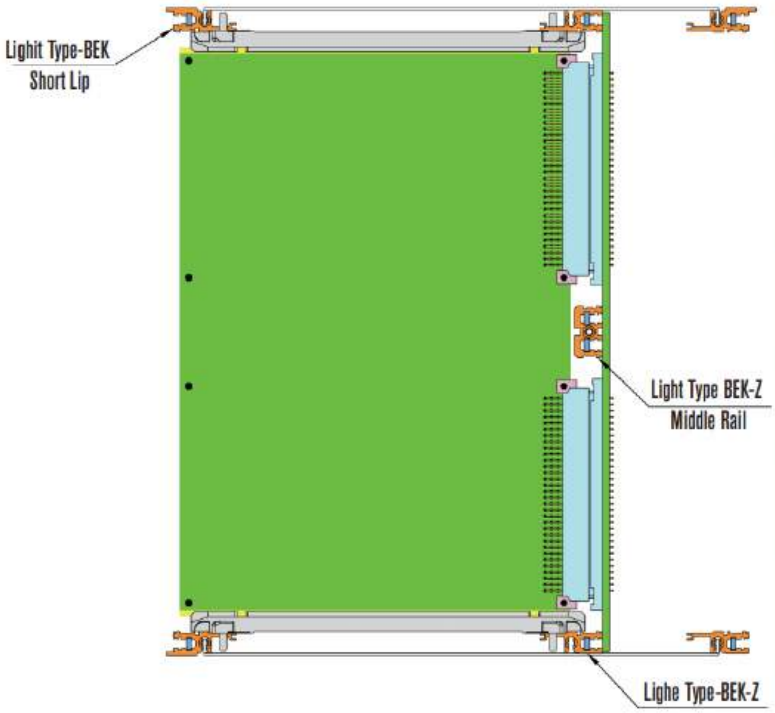

BEK 6U structure

Lighit Type-BEK Short Lip、Lighe Type-BEK-Z、Light Type BEK-Z Middle Rail

1. The impact and vibration meet the following requirements: GB/T 21563
2. Used for the installation of PCB rails
3. A board suitable for high-density connectors
4. Adaptation board size: 233.35 × 160/220

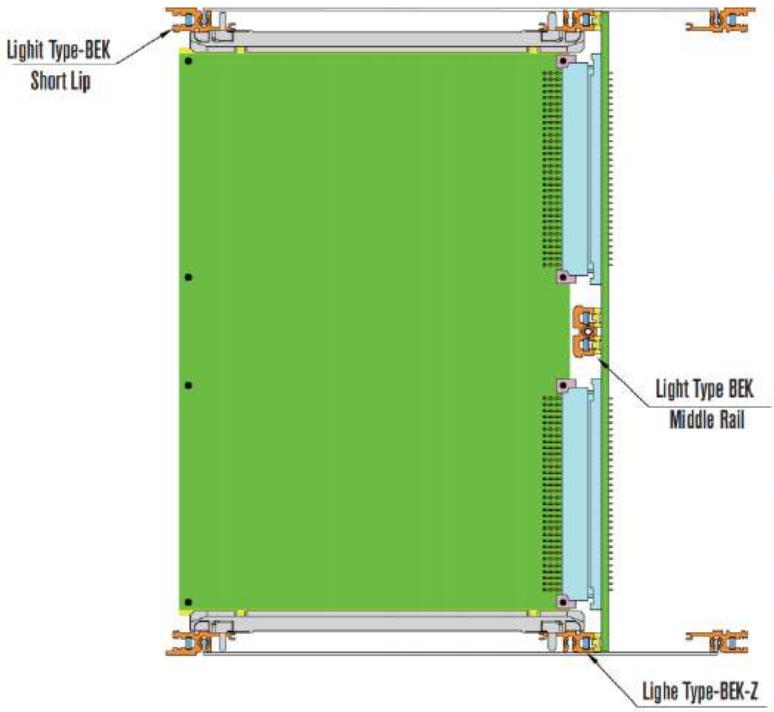

瑞德科诺 RDEKON

BEK 6U, 7U structure

BEK 6U structure

Lighit Type-BEK Short Lip、
BEK With integral Z rail Rear rails、
BEKWith integral Z rail Middle rails
1. The impact and vibration meet the following requirements: GB/T 21563
2. Used for the installation of PCB rails
3. A board suitable for high-density connectors
4. Adaptation board size: 233.35 × 160/220

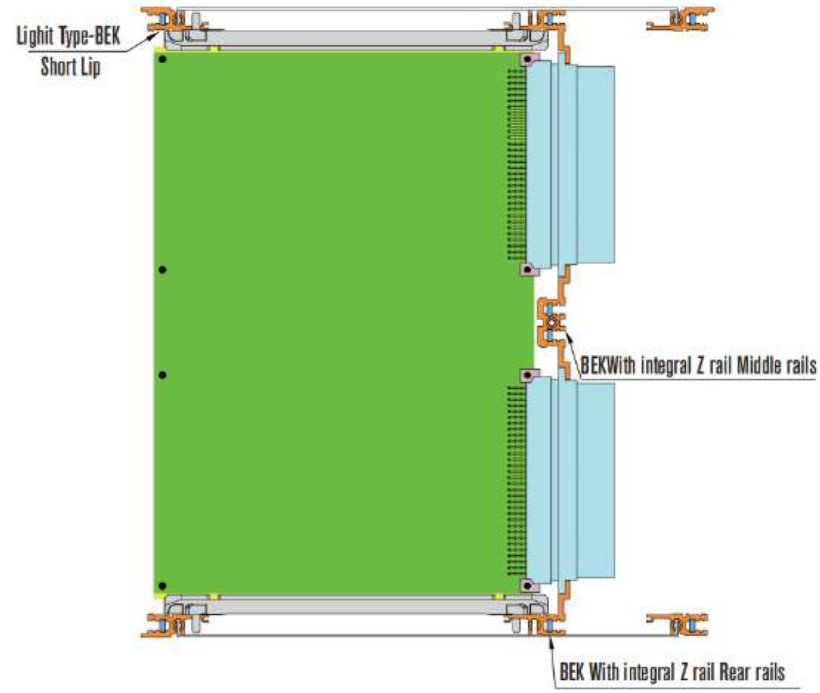

BEK 7U(6U+1U) structure

Lighit Type-BEK Short Lip、
J-shaped groove type BEG composite front beam
Lighe Type-BEK-Z、Light Type BEK-Z Middle Rail
1. Compliant with IEEE 1101.10 standard
2. The impact and vibration meet the following requirements: GB/T 21563
3. Used in conjunction with the panel for installing the CompactPCI puller
4. Used for the installation of PCB rails
5. A board suitable for high-density connectors
6. Adaptation board size: 233.35 × 160/220
7. Choosing a J-shaped front beam can withstand higher insertion and extraction torque
8. The rear beam is used for directly installing the backplate (without insulation strips)

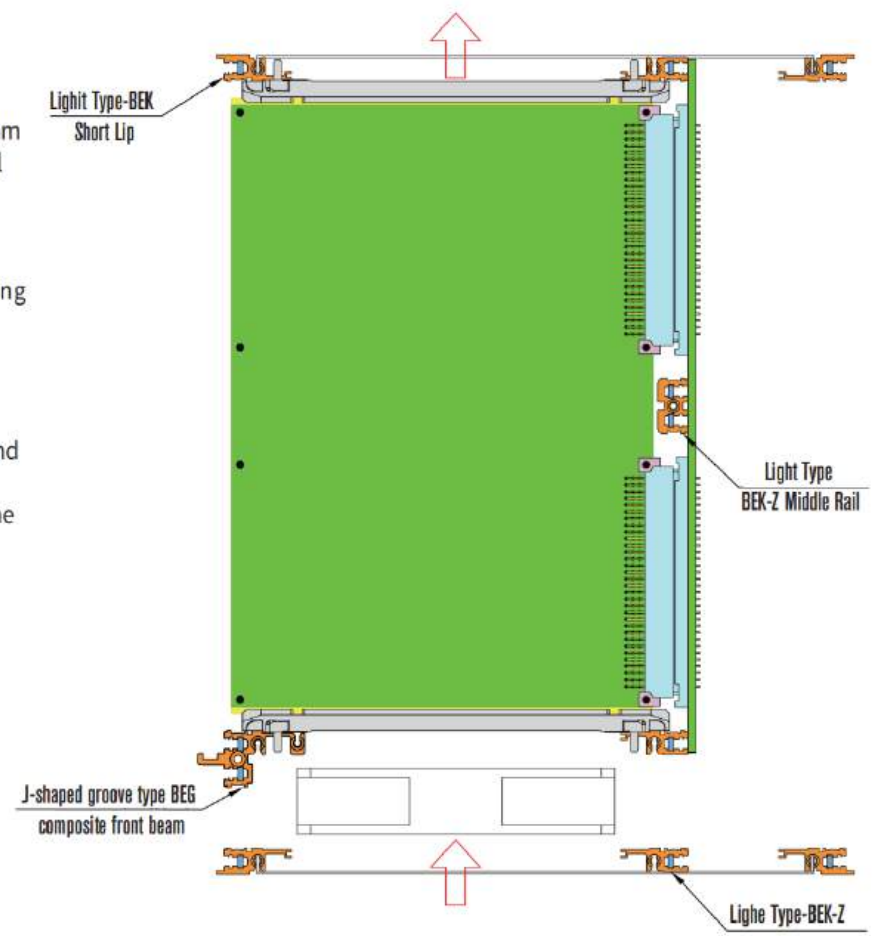

BEK&BEG PRO Series Subracks Front horizontal Rail

BEK 7U structure

BEK 7U(6U+1U) structure

Lighit Type-BEK Short Lip、BEG-J Long Lip、
Lighe Type-BEK-Z、Light Type BEK-Z Middle Rail

1. Compliant with IEEE 1101.10 standard
2. The impact and vibration meet the following requirements: GB/T 21563
3. Used in conjunction with the panel for installing the CompactPCI puller
4. Used for the installation of PCB rails
5. A board suitable for high-density connectors
6. Adaptation board size: 233.35 × 160/220
7. Choosing a J-shaped front beam can withstand higher insertion and extraction torque
8. The rear beam is used for directly installing the backplate (without insulation strips)

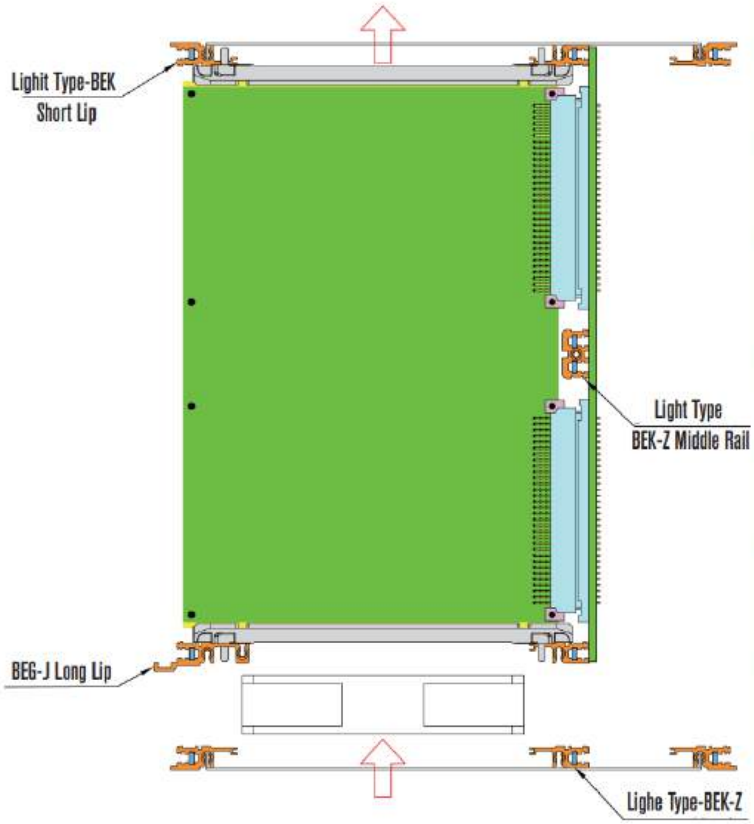

BEK 7U(6U+1U) structure

Lighit Type-BEK Short Lip、Lighe Type-BEK-Z
Light Type BEK-Z Middle Rail

1. The impact and vibration meet the following requirements: GB/T 21563
2. Used for the installation of PCB rails
3. A board suitable for high-density connectors
4. Adaptation board size: 233.35 × 160/220
5. The rear beam is used for directly installing the backplate (without insulation strips)

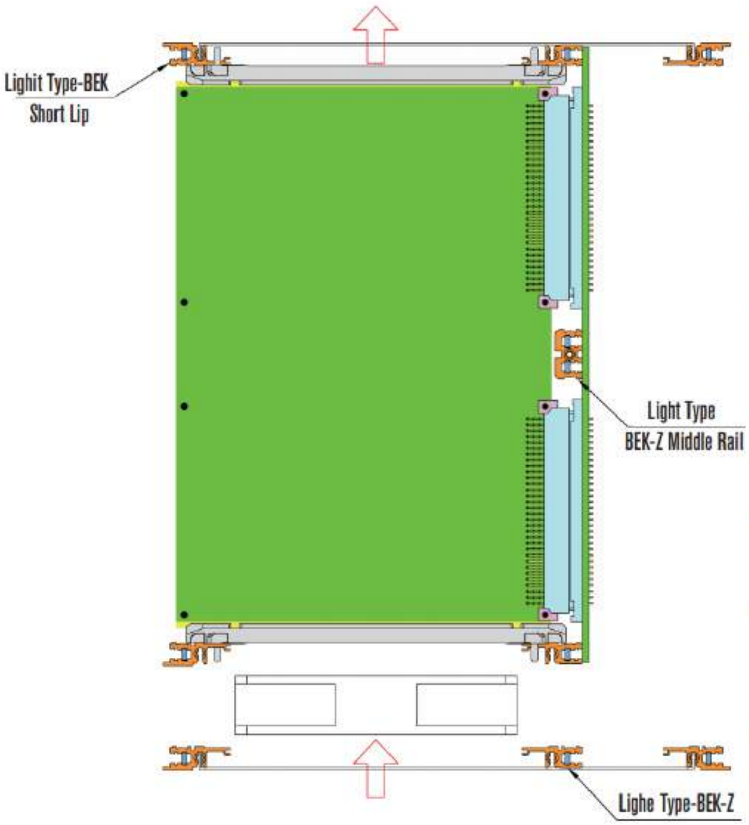

BEK 7U structure

BEK 7U(6U+1U) structure

Lighit Type-BEK Short Lip、
J-shaped groove type BEG composite front beam
Light Type BEK Middle Rail、Lighe Type-BEK

1. Compliant with IEEE 1101.10 standard
2. The impact and vibration meet the following requirements: GB/T 21563
3. Used in conjunction with the panel for installing the CompactPCI puller
4. Used for the installation of PCB rails
5. A board suitable for high-density connectors
6. Adaptation board size: 233.35 × 160/220
7. Choosing a J-shaped front beam can withstand higher insertion and extraction torque

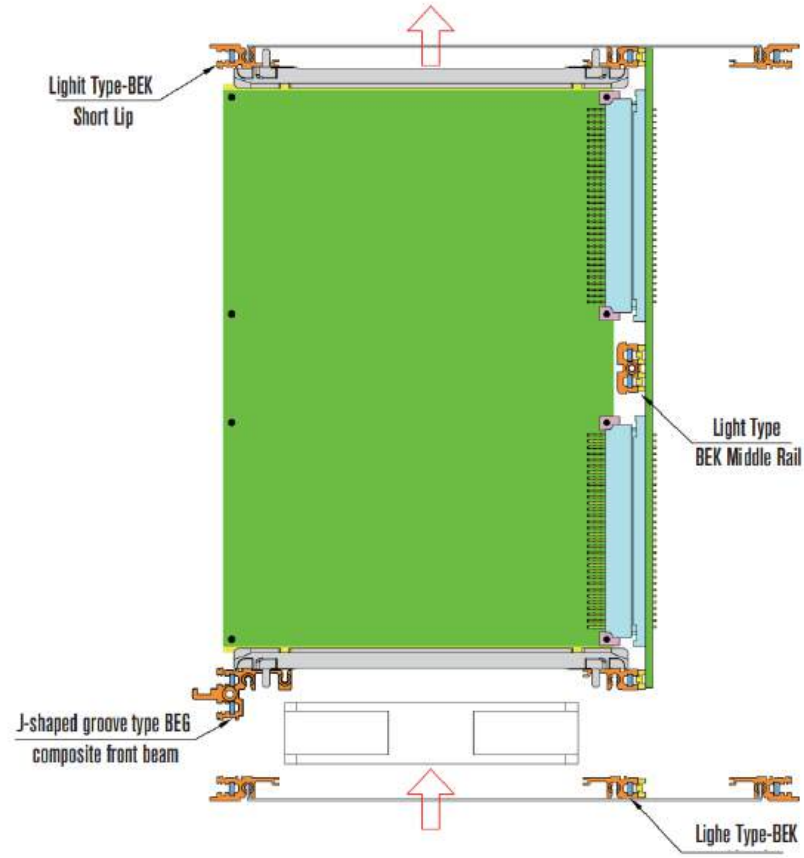

BEK 7U(6U+1U) structure

Lighit Type-BEK Short Lip、BEG-J Long Lip、
Light Type BEK Middle Rail、Lighe Type-BEK

1. Compliant with IEEE 1101.10 standard
2. The impact and vibration meet the following requirements: GB/T 21563
3. Used in conjunction with the panel for installing the CompactPCI puller
4. Used for the installation of PCB rails
5. A board suitable for high-density connectors
6. Adaptation board size: 233.35 × 160/220
7. Choosing a J-shaped front beam can withstand higher insertion and extraction torque

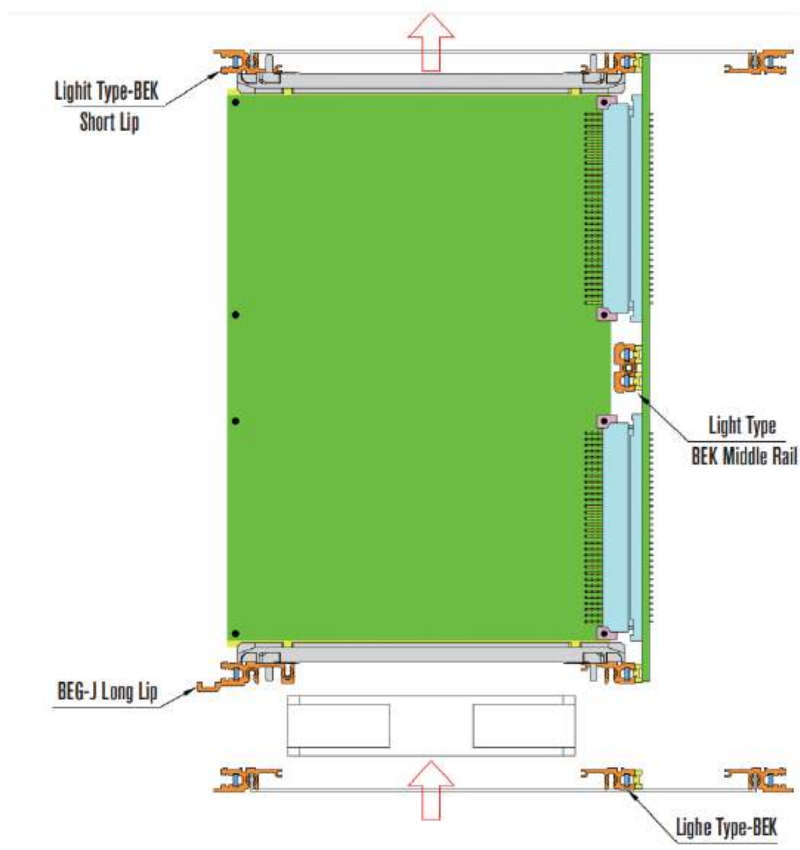

BEK&BEG PRO Series Subracks
Front horizontal Rail

瑞德科诺 RDEKON

BEK 7U structure

BEK 7U(6U+1U) structure

Lighit Type-BEK Short Lip、BEG-J Long Lip、
Light Type BEK Middle Rail、Lighe Type-BEK

1. The impact and vibration meet the following requirements: GB/T 21563
2. Used for the installation of PCB rails
3. A board suitable for high-density connectors
4. Adaptation board size: 233.35 × 160/220

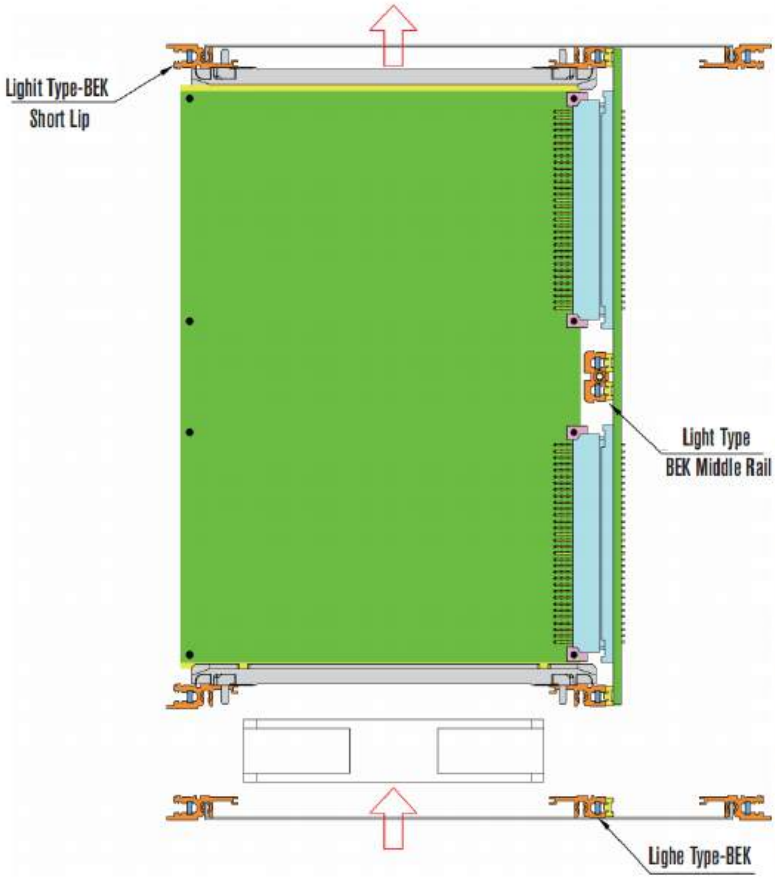

BEG 3U structure

BEG 3U structure

Heavy Type-BEG Short Lip、Heavy Type-BEG
1. The impact and vibration meet the following requirements: GB/T 21563
2. Used for the installation of PCB rails
3. A board suitable for high-density connectors
4. Adaptation board size: 100 × 160/220

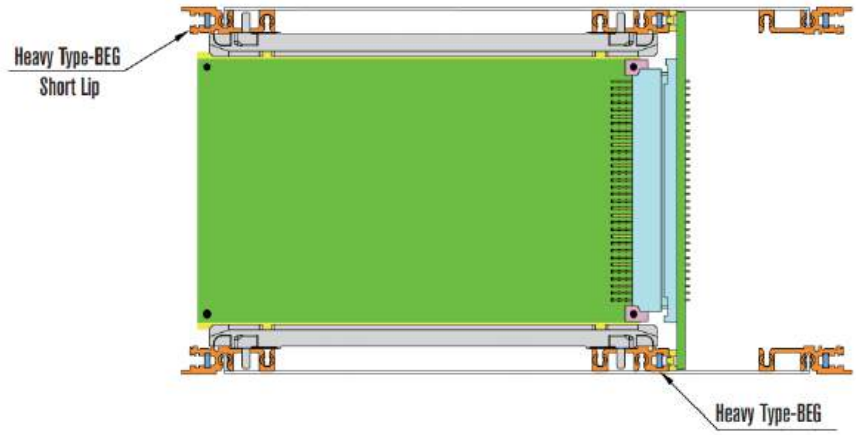

BEG 3U structure

Heavy Type-BEG Short Lip、BEG-Long Lip、Heavy Type-BEG
1. Compliant with IEEE 1101.10 standard
2. The impact and vibration meet the following requirements: GB/T 21563
3. Used in conjunction with the panel for installing the CompactPCI puller
4. Used for the installation of PCB rails
5. A board suitable for high-density connectors
6. Adaptation board size: 100 × 160/220

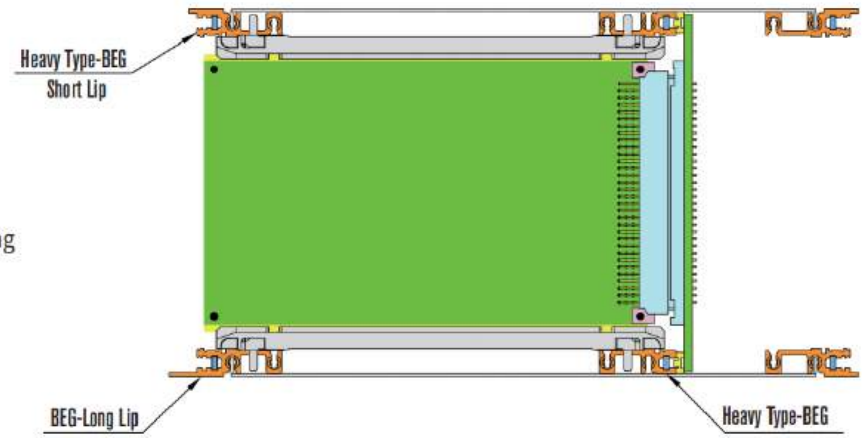

BEG 3U structure

Heavy Type-BEG Short Lip、
BEG With integral Z rail Rear rails
1. The impact and vibration meet the following requirements: GB/T 21563
2. Used for the installation of PCB rails
3. A board suitable for high-density connectors
4. Adaptation board size: 100 × 160/220

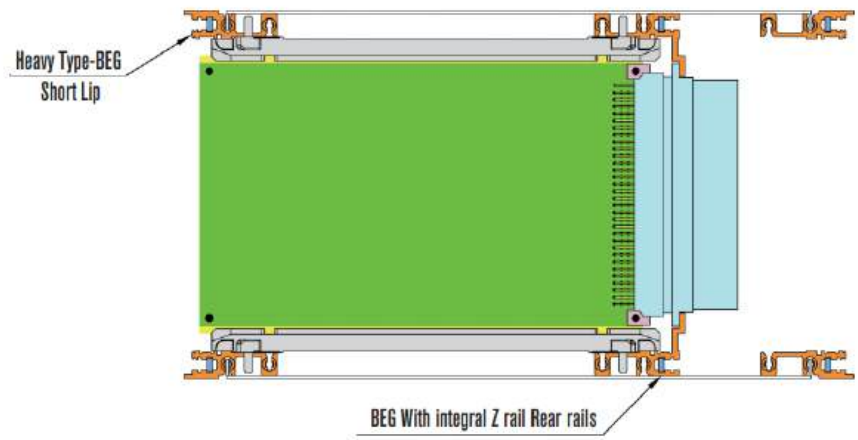

BEG 3U structure

BEG 3U structure

Heavy Type-BEG Short Lip、BEG-Long Lip、
BEG With integral Z rail Rear rails

1. Compliant with IEEE 1101.10 standard
2. The impact and vibration meet the following requirements: GB/T 21563
3. Used in conjunction with the panel for installing the CompactPCI puller
4. Used for the installation of PCB rails
5. A board suitable for high-density connectors
6. Adaptation board size: 100 × 160/220

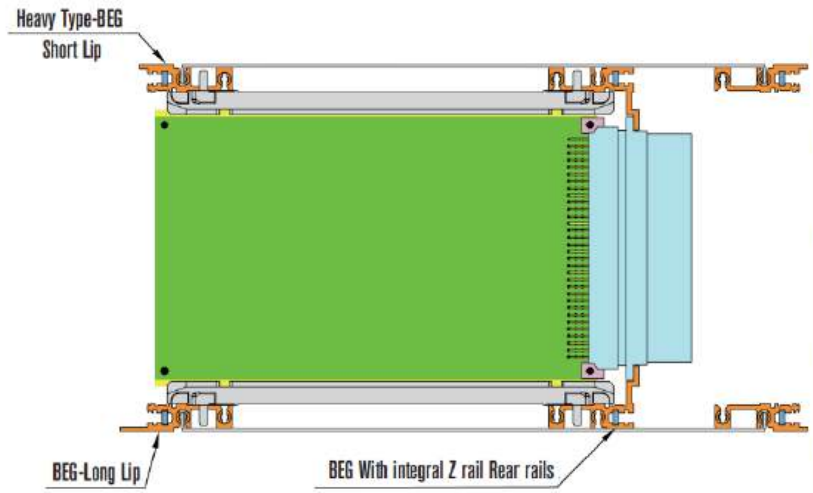

BEG 4U (3+1U) structure

Heavy Type-BEG Short Lip、Heavy Type-BEG
J-shaped groove type BEG composite front beam

1. Compliant with IEEE 1101.10 standard
2. The impact and vibration meet the following requirements: GB/T 21563
3. Used in conjunction with the panel for installing the CompactPCI puller
4. Used for the installation of PCB rails
5. A board suitable for high-density connectors
6. Adaptation board size: 100 × 160/220
7. Choosing a J-shaped front beam can withstand higher insertion and extraction torque

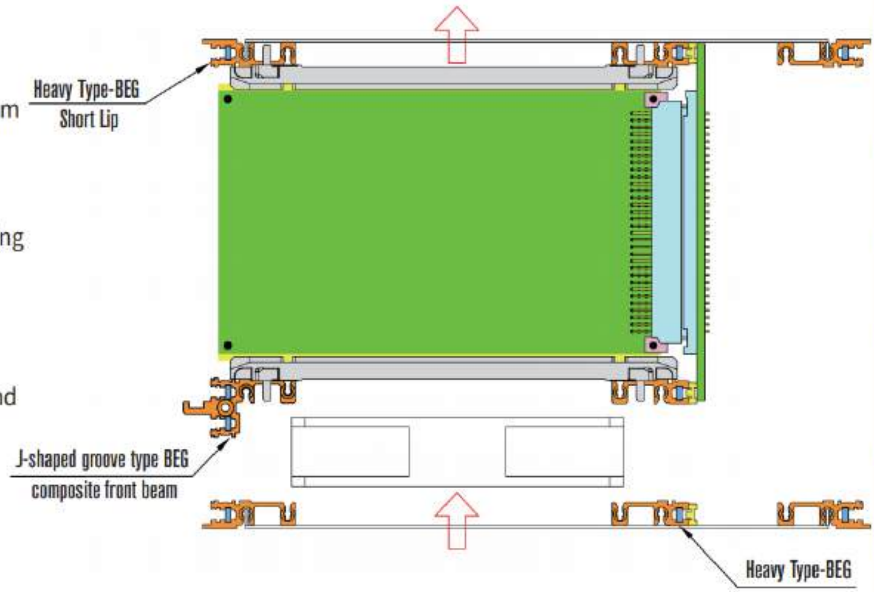

BEG 4U (3+1U) structure

Heavy Type-BEG Short Lip、Heavy Type-BEG

1. The impact and vibration meet the following requirements: GB/T 21563
2. Used for the installation of PCB rails
3. A board suitable for high-density connectors
4. Adaptation board size: 100 × 160/220

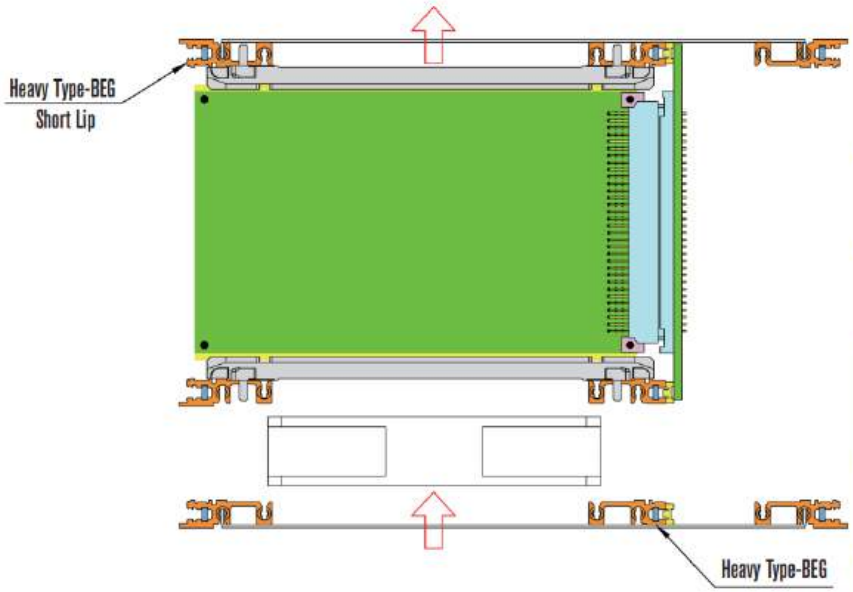

BEG 6U structure

BEG 6U (3U+3U) structure

Heavy Type-BEG Short Lip、Front and Rear Rail、J-shaped groove type BEG composite front beam、Heavy Type-BEG、BEG-Long Lip

1. Compliant with IEEE 1101.10 standard
2. The impact and vibration meet the following requirements: GB/T 21563
3. Used in conjunction with the panel for installing the CompactPCI puller
4. Used for the installation of PCB rails
5. A board suitable for high-density connectors
6. Adaptation board size: 100 × 160/220
7. Choosing a J-shaped front beam can withstand higher insertion and extraction torque

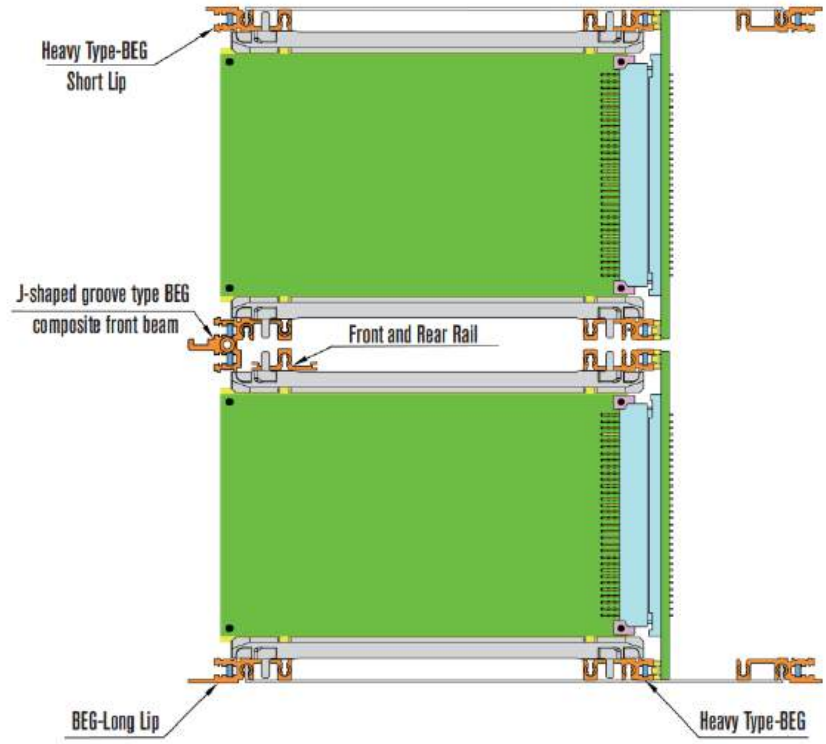

BEG 6U (3U+3U) structure

Heavy Type-BEG Short Lip、BEG-Long Lip、Heavy Type-BEG-Z

1. Compliant with IEEE 1101.10 standard
2. The impact and vibration meet the following requirements: GB/T 21563
3. Used in conjunction with the panel for installing the CompactPCI puller
4. Used for the installation of PCB rails
5. A board suitable for high-density connectors
6. Adaptation board size: 100 × 160/220
7. The rear beam is used for directly installing the backplate (without insulation strips)

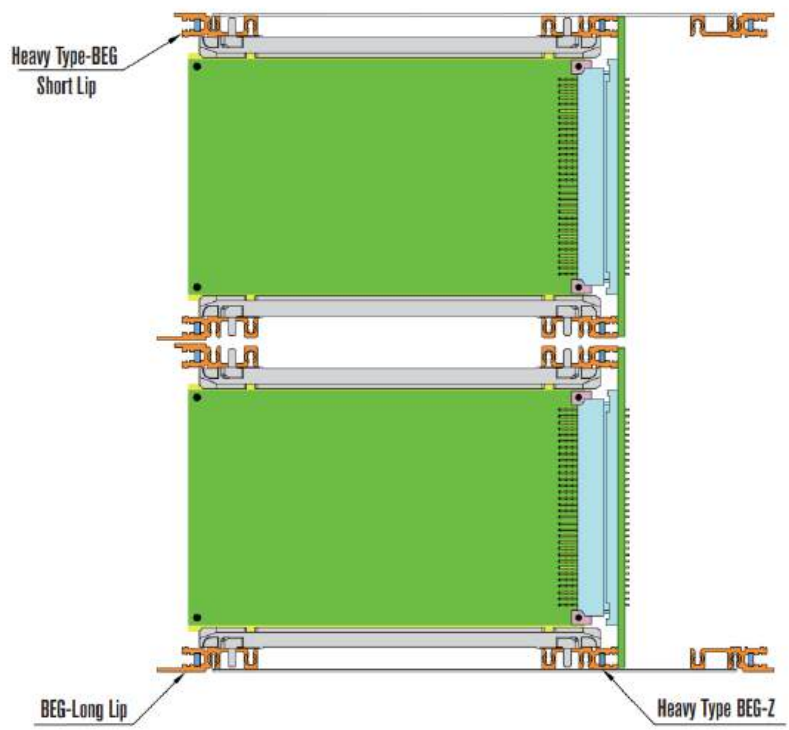

BEK&BEG PRO Series Subracks Front horizontal Rail

BEG 6U struct

BEG 6U (3U+3U) structure

Heavy Type-BEG Short Lip、BEG-Long Lip、BEG With integral Z rail Rear rails

1. Compliant with IEEE 1101.10 standard
2. The impact and vibration meet the following requirements: GB/T 21563
3. Used in conjunction with the panel for installing the CompactPCI puller
4. Used for the installation of PCB rails
5. A board suitable for high-density connectors
6. Adaptation board size: 100 × 160/220
7. Choosing a J-shaped front beam can withstand higher insertion and extraction torque

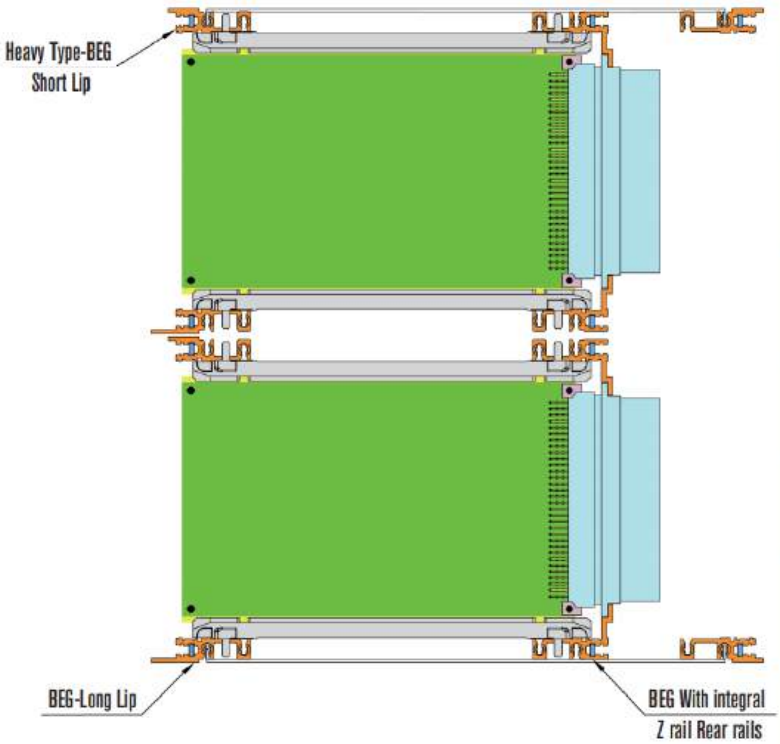

BEG 6U structure

Heavy Type-BEG Short Lip、Heavy Type-BEG-Z、Light Type BEK-Z Middle Rail

1. The impact and vibration meet the following requirements: GB/T 21563
2. Used for the installation of PCB rails
3. A board suitable for high-density connectors
4. Adaptation board size: 233.35 × 160/220
5. The rear beam is used for directly installing the backplate (without insulation strips)

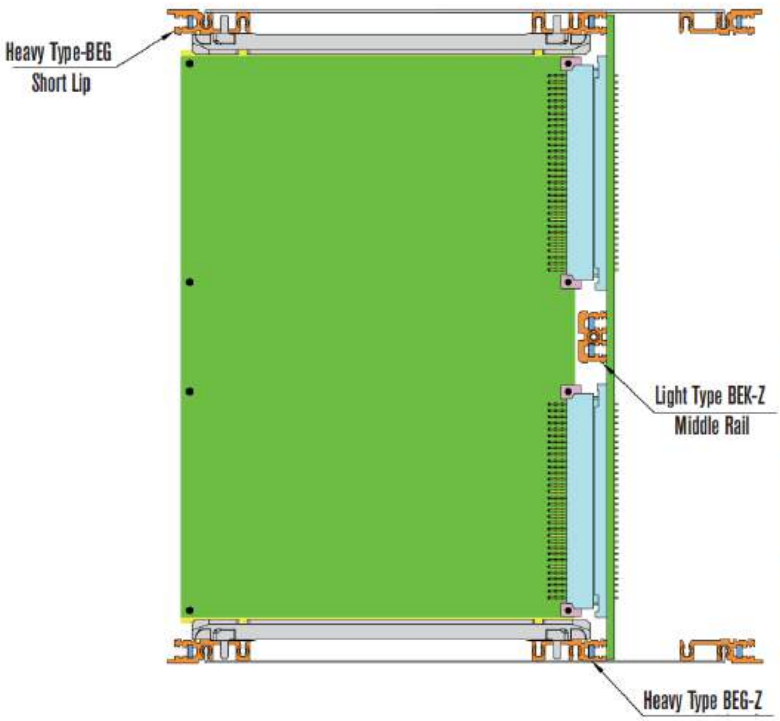

BEG 6U structure

BEG 6U structure

Heavy Type-BEG Short Lip、BEG-J Long Lip、
Heavy Type-BEG-Z、Light Type BEK-Z Middle Rail

1. Compliant with IEEE 1101.10 standard
2. The impact and vibration meet the following requirements: GB/T 21563
3. Used in conjunction with the panel for installing the CompactPCI puller
4. Used for the installation of PCB rails
5. A board suitable for high-density connectors
6. Adaptation board size: 233.35 × 160/220
7. Choosing a J-shaped front beam can withstand higher insertion and extraction torque
8. The rear beam is used for directly installing the backplate (without insulation strips)

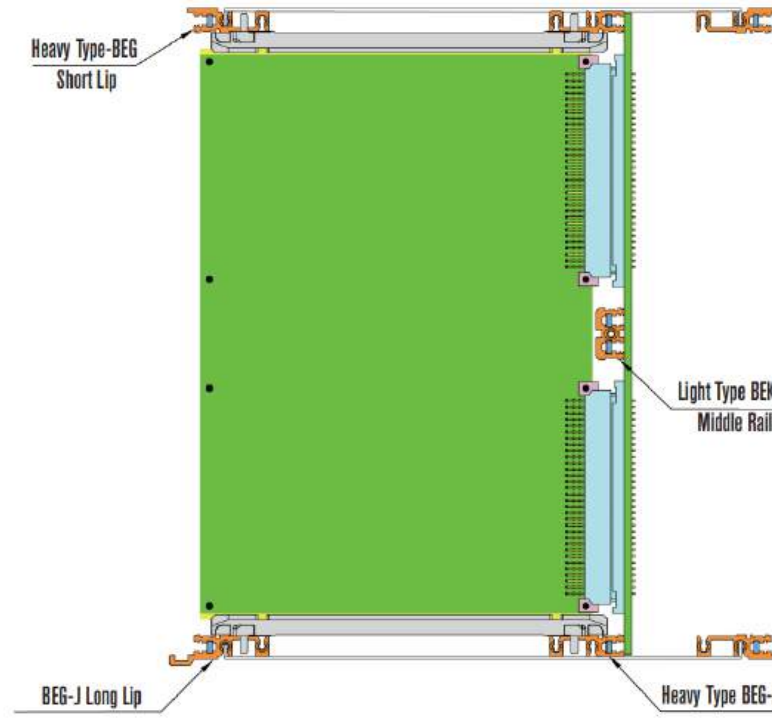

BEG 6U structure

Heavy Type-BEG Short Lip、BEG-Long Lip、
Heavy Type-BEG-Z、Light Type BEK-Z Middle Rail

1. Compliant with IEEE 1101.10 standard
2. The impact and vibration meet the following requirements: GB/T 21563
3. Used in conjunction with the panel for installing the CompactPCI puller
4. Used for the installation of PCB rails
5. A board suitable for high-density connectors
6. Adaptation board size: 233.35 × 160/220
7. The rear beam is used for directly installing the backplate (without insulation strips)

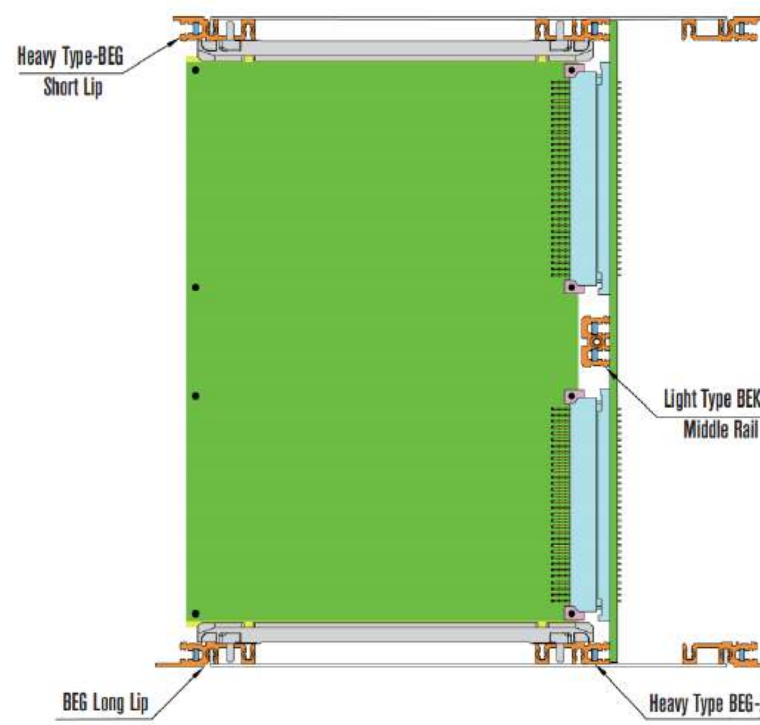

BEG 6U structure

BEG 6U structure

Heavy Type-BEG Short Lip、
BEG With integral Z rail Rear rails、
BEKWith integral Z rail Middle rails

1. The impact and vibration meet the following requirements: GB/T 21563
2. Used for the installation of PCB rails
3. A board suitable for high-density connectors
4. Adaptation board size: 233.35 × 160/220

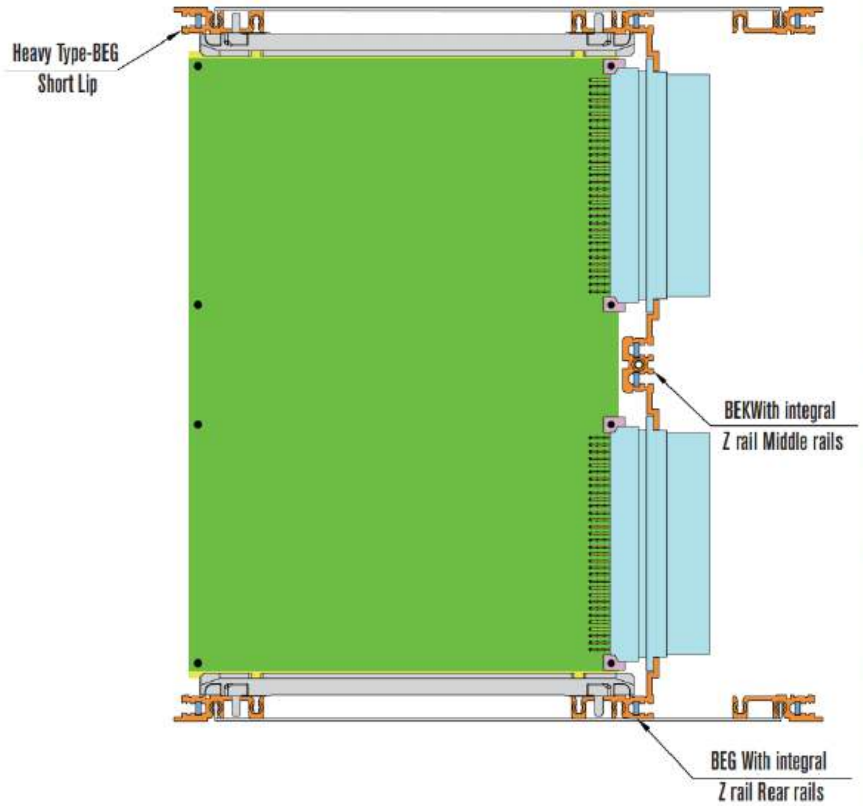

BEG 6U structure

Heavy Type-BEG Short Lip、Heavy Type-BEG、
Light Type BEK Middle Rail

1. The impact and vibration meet the following requirements: GB/T 21563
2. Used for the installation of PCB rails
3. A board suitable for high-density connectors
4. Adaptation board size: 233.35 × 160/220

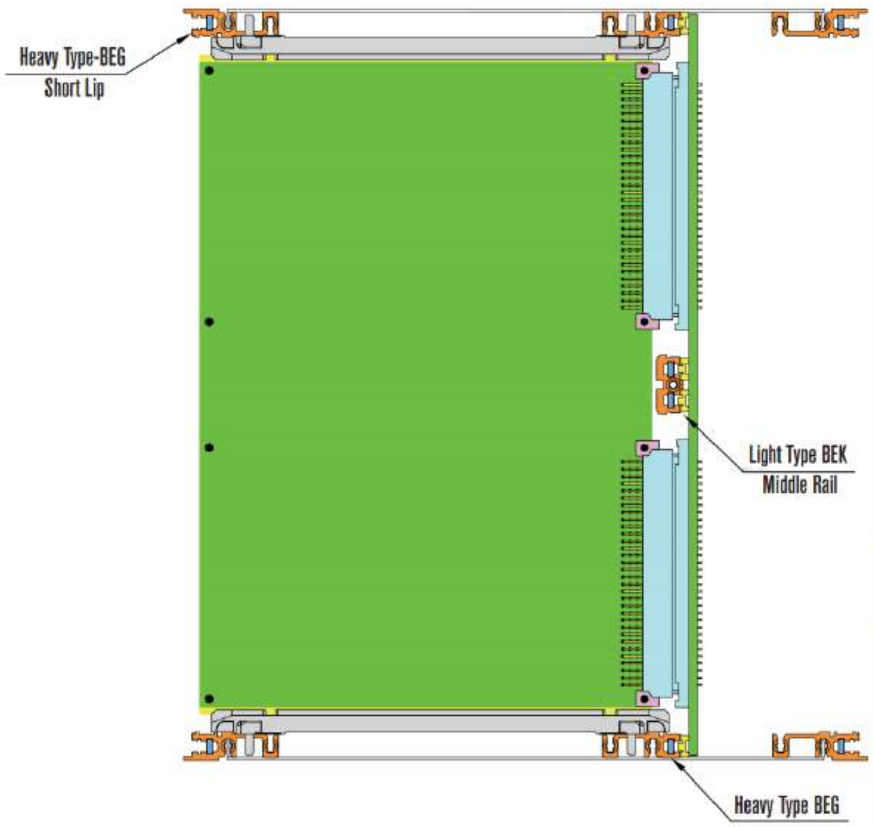

BEG 6U structure

BEG 6U structure

Heavy Type-BEG Short Lip、BEG-J Long Lip、Heavy Type-BEG、Light Type BEK Middle Rail

1. Compliant with IEEE 1101.10 standard
2. The impact and vibration meet the following requirements: GB/T 21563
3. Used in conjunction with the panel for installing the CompactPCI puller
4. Used for the installation of PCB rails
5. A board suitable for high-density connectors
6. Adaptation board size: 233.35 × 160/220
7. Choosing a J-shaped front beam can withstand higher insertion and extraction torque

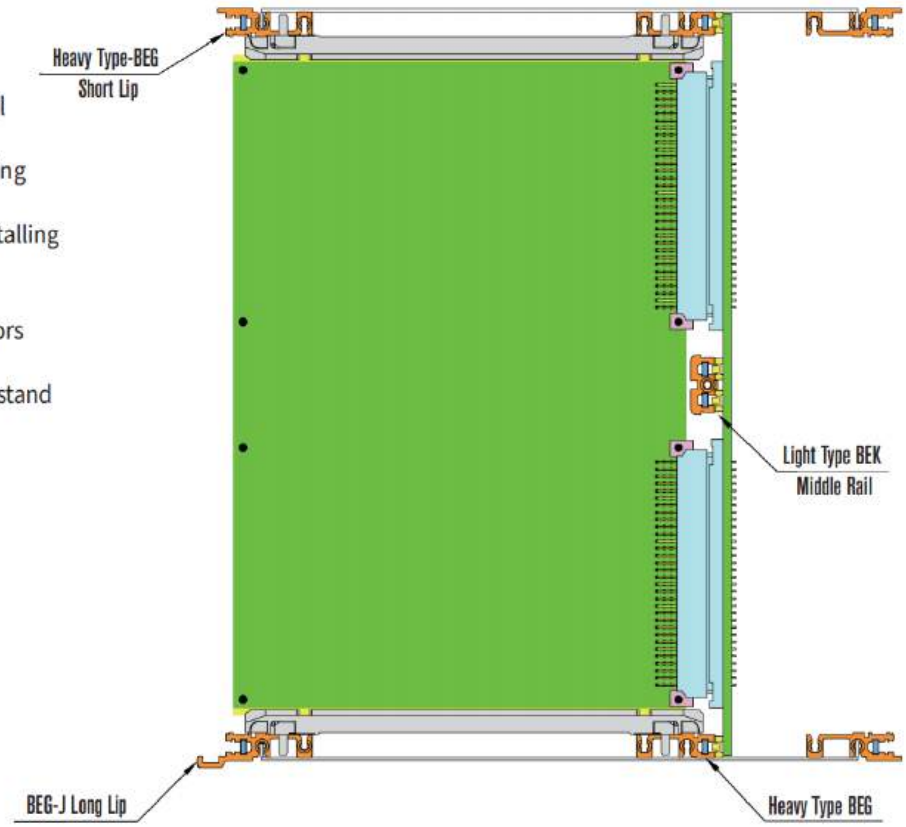

BEG 6U structure

Heavy Type-BEG Short Lip、BEG-Long Lip、Heavy Type-BEG、Light Type BEK Middle Rail

1. Compliant with IEEE 1101.10 standard
2. The impact and vibration meet the following requirements: GB/T 21563
3. Used in conjunction with the panel for installing the CompactPCI puller
4. Used for the installation of PCB rails
5. A board suitable for high-density connectors
6. Adaptation board size: 233.35 × 160/220

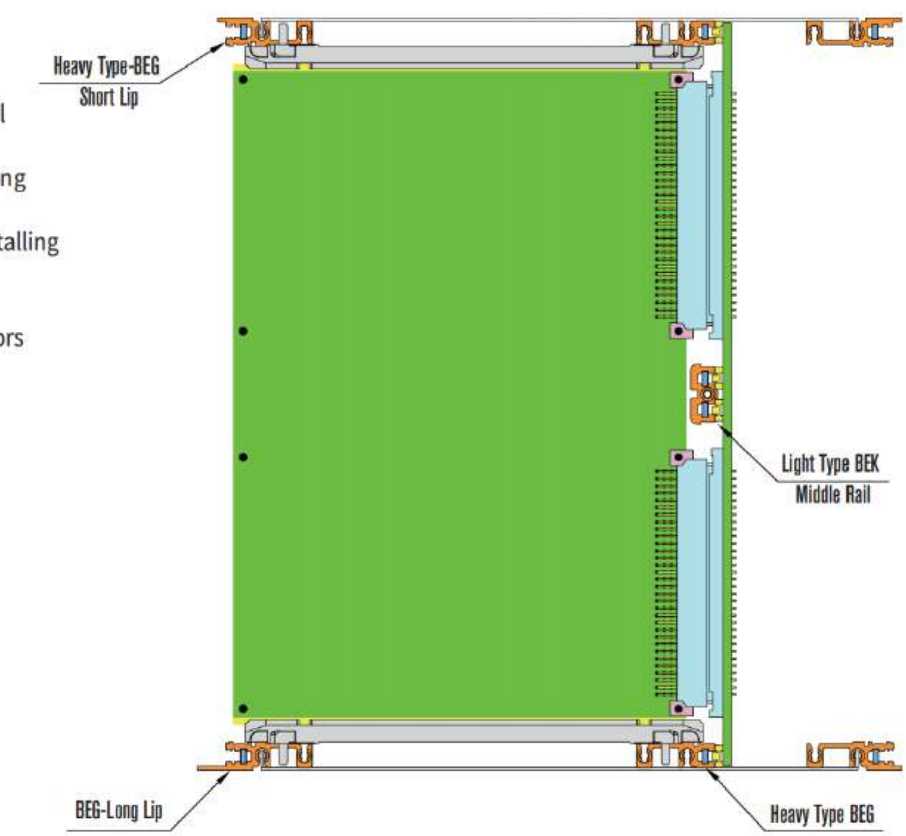

BEG 7U structure

BEG 7U (6U+1U) structure

Heavy Type-BEG Short Lip、
Light Type BEK-Z Middle Rail、
Heavy Type-BEG-Z

1. The impact and vibration meet the following requirements: GB/T 21563
2. Used for the installation of PCB rails
3. A board suitable for high-density connectors
4. Adaptation board size: 233.35 × 160/220
5. The rear beam is used for directly installing the backplate (without insulation strips)

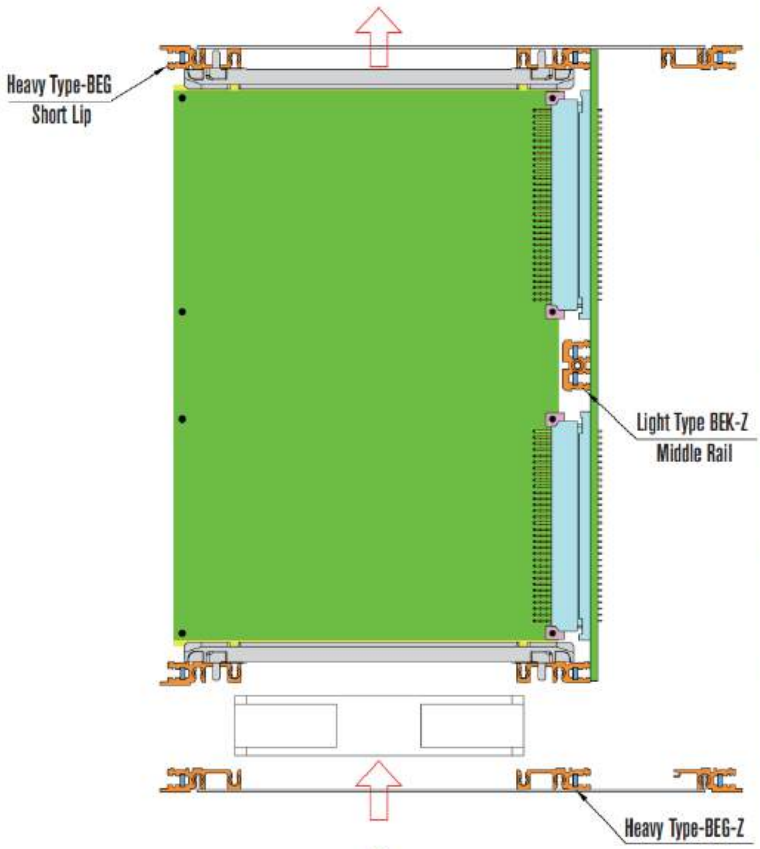

BEG 7U (6U+1U) structure

Heavy Type-BEG Short Lip、Heavy Type-BEG-Z、
Light Type BEK-Z Middle Rail

1. Compliant with IEEE 1101.10 standard
2. The impact and vibration meet the following requirements: GB/T 21563
3. Used in conjunction with the panel for installing the CompactPCI puller
4. Used for the installation of PCB rails
5. A board suitable for high-density connectors
6. Adaptation board size: 233.35 × 160/220
7. Choosing a J-shaped front beam can withstand higher insertion and extraction torque
8. The rear beam is used for directly installing the backplate (without insulation strips)

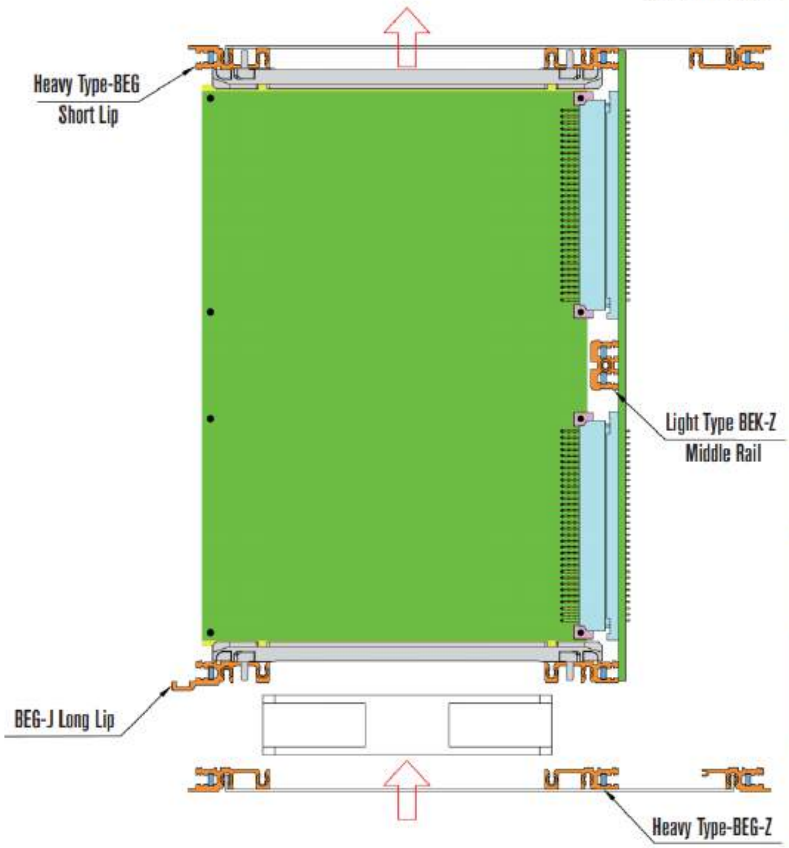

BEG 7U structure

BEG 7U (6U+1U) structure

Heavy Type-BEG Short Lip、
J-shaped groove type BEG composite front beam、
Light Type BEK-Z Middle Rail、Heavy Type-BEG-Z

1. Compliant with IEEE 1101.10 standard
2. The impact and vibration meet the following requirements: GB/T 21563
3. Used in conjunction with the panel for installing the CompactPCI puller
4. Used for the installation of PCB rails
5. A board suitable for high-density connectors
6. Adaptation board size: 233.35 × 160/220
7. Choosing a J-shaped front beam can withstand higher insertion and extraction torque
8. The rear beam is used for directly installing the backplate (without insulation strips)

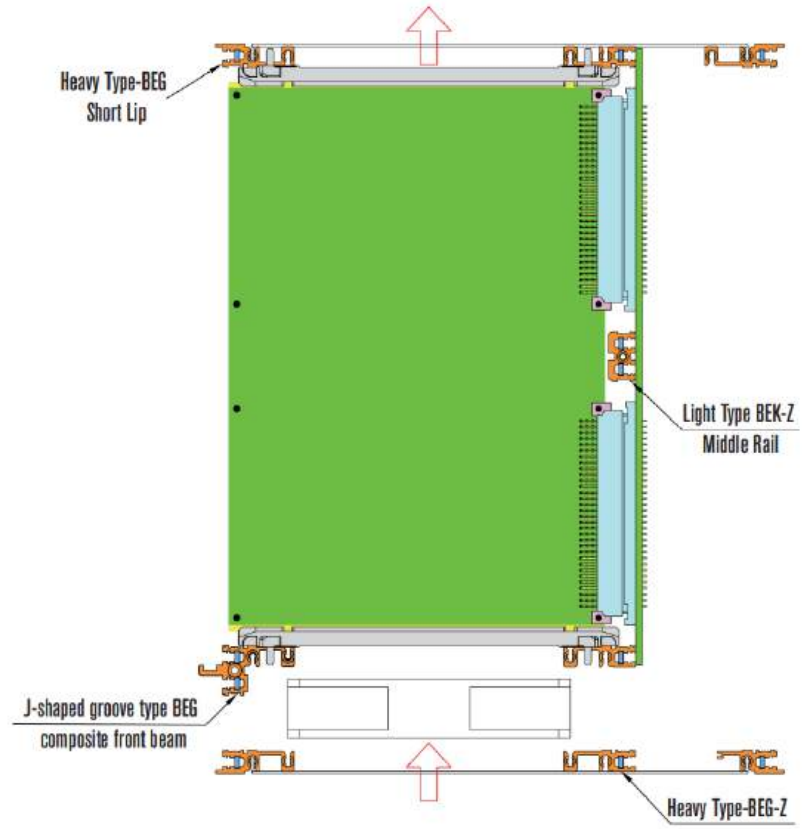

BEG 7U (6U+1U) structure

Heavy Type-BEG Short Lip、
Light Type BEK Middle Rail、Heavy Type-BEG

1. The impact and vibration meet the following requirements: GB/T 21563
2. Used for the installation of PCB rails
3. A board suitable for high-density connectors
4. Adaptation board size: 233.35 × 160/220

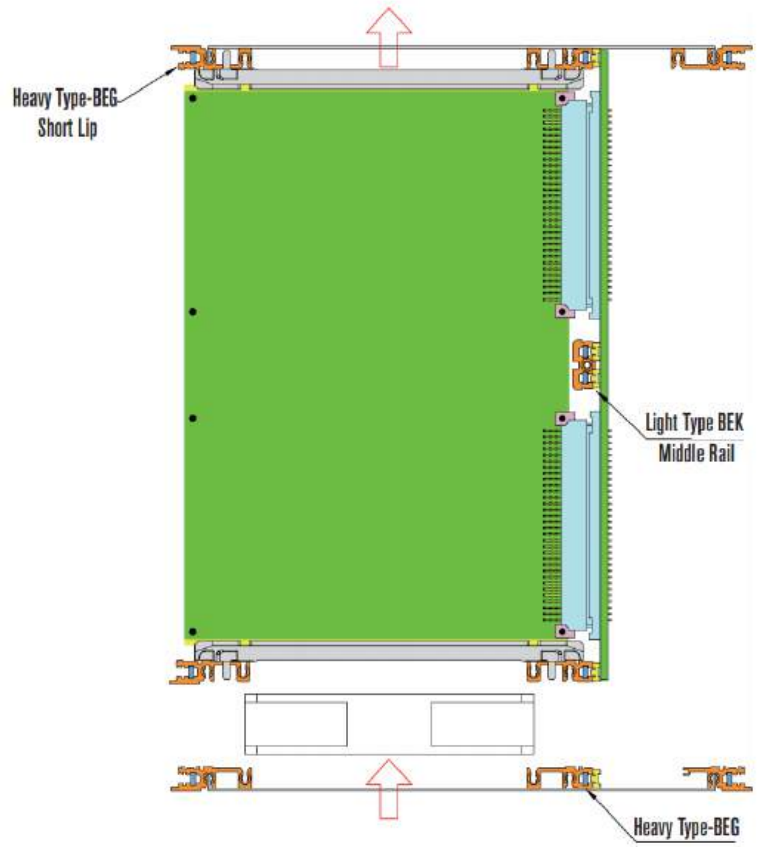

瑞德科诺 RDEKON

BEG 7U structure

BEG 7U (6U+1U) structure

Heavy Type-BEG Short Lip、BEG-J Long Lip、
Heavy Type-BEG、Light Type BEK Middle Rail

1. Compliant with IEEE 1101.10 standard
2. The impact and vibration meet the following requirements: GB/T 21563
3. Used in conjunction with the panel for installing the CompactPCI puller
4. Used for the installation of PCB rails
5. A board suitable for high-density connectors
6. Adaptation board size: 233.35 × 160/220
7. Choosing a J-shaped front beam can withstand higher insertion and extraction torque

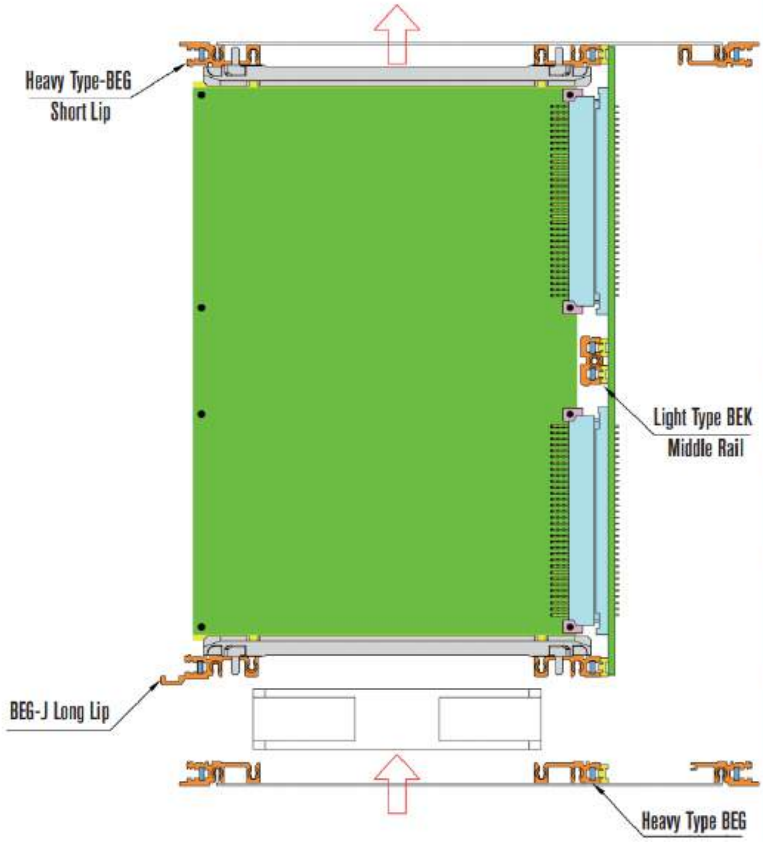

BEG 7U (6U+1U) structure

Heavy Type-BEG Short Lip、Heavy Type-BEG、
J-shaped groove type BEG composite front beam、
Light Type BEK Middle Rail

1. Compliant with IEEE 1101.10 standard
2. The impact and vibration meet the following requirements: GB/T 21563
3. Used in conjunction with the panel for installing the CompactPCI puller
4. Used for the installation of PCB rails
5. A board suitable for high-density connectors
6. Adaptation board size: 233.35 × 160/220
7. Choosing a J-shaped front beam can withstand higher insertion and extraction torque

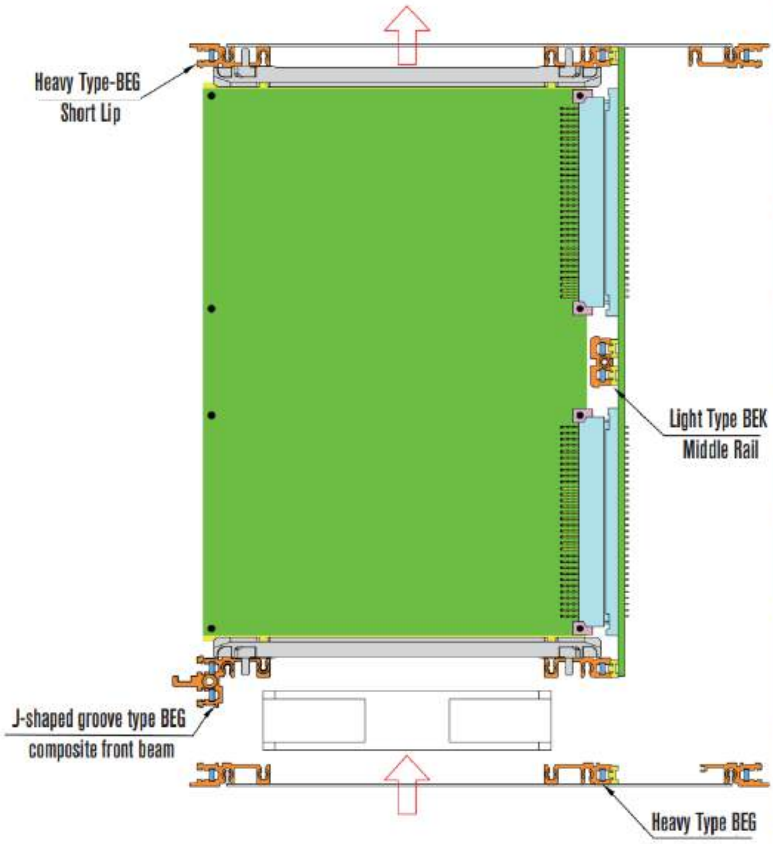

Appendix

Material Page Table

00100008 to 0110034

Order no	Page	Order no	Page	Order no	Page	Order no	Page	Order no	Page	Order no	Page
00100008	37	00130403	77	00161004	77	00806004	34	009026301	29	01013000	149
00100066	37	00130404	77	00161201	77	00806005	33	009026302	30	01013021	149
00100100	134	00130501	77	00161202	77	00806006	33	009026303	30	01013035	149
00100101	134	00130502	77	00161203	77	00806007	34	009026304	29	01014000	149
00100102	134	00130503	77	00161204	77	00809001	33	009026305	30	01023000	149
00100103	134	00130504	77	00232810	146	00809002	34	009026311	30	01023021	149
00100104	134	00130601	77	00234210	146	0090110401	29	009026312	29	01023035	149
00100105	134	00130602	77	00236310	146	0090110402	30	009028401	29	01024000	149
00100106	134	00130603	77	00238410	146	0090110403	30	009028402	30	01033000	149
00100107	134	00130604	77	00238420	147	0090110404	30	009028403	29	01033021	149
00100108	134	00130701	77	00244210	146	0090110406	32	009028404	30	01033035	149
00100109	134	00130702	77	00246310	146	0090110407	31	009028405	30	01034000	149
00100110	135	00130703	77	00248410	146	0090110408	31	009028411	30	01043000	149
00100111	135	00130704	77	00264210	146	0090110409	31	009028412	29	01043021	149
00100112	135	00130801	77	00266310	146	0090110413	29	0090310401	29	01043035	149
00100113	135	00130802	77	00268410	146	009014202	30	0090310402	29	01044000	149
00100114	135	00130803	77	00268420	147	009014203	29	0090310403	30	01053000	149
00100115	135	00130804	77	00330042	129	009014205	30	0090310404	30	01053021	149
00100116	135	00131001	77	00330063	129	009014206	32	009034201	29	01053035	149
00100117	135	00131002	77	00330084	129	009014207	31	009034202	29	01054000	149
00100118	135	00131003	77	00340042	129	009014208	31	009034203	30	01063000	149
00100119	135	00131004	77	00340063	129	009014209	31	009034204	30	01063021	149
00100120	136	00131201	77	00340084	129	009014213	29	009036301	29	01063035	149
00100121	136	00131202	77	00430042	129	009016303	29	009036302	29	01064000	149
00100122	136	00131203	77	00430063	129	009016304	30	009036303	30	01073000	149
00100123	136	00131204	77	00430084	129	009016306	32	009036304	30	01073021	149
00100124	136	00160301	77	00440042	129	009016307	31	009038401	29	01073035	149
00100125	136	00160302	77	00440063	129	009016308	31	009038402	29	01074000	149
00100126	136	00160303	77	00440084	129	009016309	31	009038403	30	01083000	149
00100127	136	00160304	77	00630042	129	009016313	29	009038404	30	01083021	149
00100128	136	00160401	77	00630063	129	009018401	29	009114202	30	01083035	149
00100129	136	00160402	77	00630084	129	009018402	30	009116301	30	01084000	149
00100130	136	00160403	77	00640042	129	009018403	30	009116302	30	01093000	149
00100131	136	00160404	77	00640063	129	009018404	30	0100003	9	01093021	149
00100132	136	00160501	77	00640084	129	009018405	31	0100005	9	01093035	149
00100133	136	00160502	77	00803002	33	009018406	32	0100006	9	01094000	149
00100134	136	00160503	77	00803003	34	009018407	31	0100007	9	0110003	9
00100135	136	00160504	77	00803004	33	009018408	31	0100010	10	0110005	9
00100136	137	00160601	77	00803005	34	009018413	29	0100012	10	0110006	9
00100137	137	00160602	77	00803006	33	0090210401	29	0100013	10	0110007	9
00100138	137	00160603	77	00803006	34	0090210402	30	0100014	10	0110010	10
00100139	137	00160604	77	00803008	33	0090210403	30	0100015	10	0110012	10
00100140	137	00160701	77	00803008	34	0090210404	30	0100016	10	0110013	10
00100142	137	00160702	77	00803009	33	0090210405	29	0100017	19	0110014	10
00100143	137	00160703	77	00803010	34	0090210411	30	0100018	19	0110022	10
00100144	137	00160704	77	00804001	33	0090210412	29	0100019	19	0110028	20
00100145	137	00160801	77	00804002	33	009024201	29	0100020	20	0110029	20
00130301	77	00160802	77	00804003	33	009024202	30	0100021	20	0110030	20
00130302	77	00160803	77	00804004	33	009024203	29	0100022	20	0110031	19
00130303	77	00160804	77	00804004	34	009024204	30	0100023	10	0110032	19
00130304	77	00161001	77	00806001	34	009024205	30	0100024	19	0110033	19
00130401	77	00161002	77	00806002	33	009024211	30	0100025	20	0110034	19
00130402	77	00161003	77	00806003	34	009024212	29	0100026	10	0110034	19

Appendix

瑞德科诺 RDEKON

Material Page Table

0110035 to 02430642

Order no	Page	Order no	Page	Order no	Page	Order no	Page	Order no	Page	Order no	Page
0110035	19	01151750	33	0120020	11	01362358	35	0150022	21	0210004	12
0110035	19	01151750	34	0120021	11	01362957	35	0150023	21	0210005	12
0110036	19	01151751	33	01230042	132	01362958	35	0150024	21	0210006	12
0110036	19	01151752	33	01230084	132	01363557	35	0150025	21	0210008	22
0110037	19	01151753	33	01231756	35	01363558	35	0150026	21	0210009	22
0110037	20	01151753	34	01232356	35	0140003	9	0150042	11	0210010	22
0110038	20	01151754	33	01232956	35	0140005	9	0150063	11	0210011	22
0110039	20	01151754	34	01233142	130	0140006	9	0150084	11	0210012	22
0110040	20	01151755	33	01233163	130	0140007	9	0150104	11	0210013	22
0110041	20	01152350	33	01233184	130	0140010	9	01533142	130	02141751	34
0110042	20	01152350	34	01239142	130	0140012	9	01533163	130	02141752	34
0110043	10	01152950	33	01239163	130	0140013	9	01533184	130	02141755	34
0110044	10	01152950	34	01239184	130	0140014	9	01539142	130	02151751	34
0110045	10	01153550	33	01240042	132	0140016	19	01539163	130	02151752	34
0110046	19	01153550	34	01240084	132	0140017	19	01539184	130	02151755	34
0110047	19	01154150	33	01250042	132	0140018	19	01630042	132	02191751	34
0110048	20	01154150	34	01250084	132	0140019	19	01630084	132	02191755	34
0110049	20	01161750	33	01261756	35	0140020	19	01633142	130	02230042	132
0110050	20	01161750	34	01262356	35	0140021	19	01633163	130	02230084	132
0110056	19	01161753	33	01262956	35	0140022	19	01633184	130	02231756	35
0110057	19	01161753	34	01263556	35	0140023	19	01639142	130	02240042	132
0110058	19	01161754	33	01316042	128	0140024	19	01639163	130	02240084	132
0110059	19	01161754	34	01316063	128	0140025	19	01639184	130	02250042	132
0110060	19	01162350	33	01316084	128	0140026	19	01640042	132	02250084	132
0110061	19	01162350	34	01322042	128	0140027	19	01640084	132	02261756	35
0110062	19	01162950	33	01322063	128	01416042	128	01650042	132	02330042	132
0110063	19	01162950	34	01322084	128	01416063	128	01650084	132	02330084	132
01103000	149	01163550	33	01328542	128	01416084	128	0180001	123	02330642	131
01103021	149	01163550	34	01328563	128	01422042	128	0180002	123	02330663	131
01103035	149	01164150	33	01328584	128	01422063	128	0180009	123	02330684	131
01104000	149	01164150	34	01330042	132	01422084	128	0180010	123	02331757	35
01131750	33	01191750	33	01330084	132	01428542	128	0180011	123	02331758	35
01131750	34	01191750	34	01331757	35	01428563	128	0180012	123	02332357	35
01132350	33	01191752	33	01331758	35	01428584	128	0200001	12	02332358	35
01132350	34	01191753	33	01332357	35	01430042	132	0200002	12	02332957	35
01132950	33	01191753	34	01332358	35	01430084	132	0200003	12	02332958	35
01132950	34	01191754	33	01332957	35	01433142	130	0200004	12	02333557	35
01133550	33	01191754	34	01332958	35	01433163	130	0200005	12	02333558	35
01133550	34	01191755	33	01333142	130	01433184	130	0200006	12	02340042	132
01134150	33	01192350	33	01333163	130	01439142	130	0200008	22	02340084	132
01134150	34	01192350	34	01333184	130	01439163	130	0200009	22	02350042	132
01141750	33	01192950	33	01333557	35	01439184	130	0200010	22	02350084	132
01141750	34	01192950	34	01333558	35	01440042	132	0200011	22	02361757	35
01141754	33	01193550	33	01339142	130	01440084	132	0200012	22	02361758	35
01141754	34	01193550	34	01339163	130	01450042	132	0200013	22	02362357	35
01142350	33	01194150	33	01339184	130	01450084	132	02013000	104	02362358	35
01142350	34	01194150	34	01340042	132	0150010	11	02023000	104	02362957	35
01142950	33	0120010	10	01340084	132	0150012	11	02033000	104	02362958	35
01142950	34	0120012	10	01350042	132	0150013	11	02043000	104	02363557	35
01143550	33	0120013	10	01350084	132	0150014	11	02053000	104	02363558	35
01143550	34	0120014	10	01361757	35	0150019	21	0210001	12	02430042	132
01144150	33	0120017	11	01361758	35	0150020	21	0210002	12	02430084	132
01144150	34	0120019	11	01362357	35	0150021	21	0210003	12	02430642	131

Appendix

Material Page Table

02430663 to 09020303 100006 to 1001044

Order no	Page	Order no	Page	Order no	Page	Order no	Page	Order no	Page	Order no	Page
02430663	131	03350042	133	03636063	141	04630042	133	06616700	126	1000010	144
02430684	131	03350084	133	03636084	141	04630084	133	06616701	126	1000011	144
02431752	36	03410042	140	03638042	141	04640042	133	06616710	126	1000012	144
02431755	36	03410063	140	03638063	141	04640084	133	06616711	126	1000013	144
02432352	36	03410084	140	03638084	141	04650042	133	06622700	126	1000066	74
02432952	36	03412042	140	03640042	133	04650084	133	06622701	126	1000066	75
02433552	36	03412063	140	03640084	133	04724542	142	06622710	126	1000066	170
02434152	36	03412084	140	03650042	133	04724563	142	06622711	126	1000066	183
02440042	132	03416042	140	03650084	133	04724584	142	07010202	74	1000066	184
02440084	132	03416063	140	03760042	138	04728542	142	07020202	75	1000066	185
02450042	132	03416084	140	03760063	138	04728563	142	07316700	125	1000066	186
02450084	132	03418042	140	03760084	138	04728584	142	07316701	125	1000066	187
02461752	36	03418063	140	03762042	138	04734542	142	07316710	125	1000066	188
02461755	36	03418084	140	03762063	138	04734563	142	07316711	125	1000066	190
02462352	36	03420042	140	03762084	138	04734584	142	07322700	125	1000066	191
02462952	36	03420063	140	03766042	138	05010201	74	07322701	125	1000066	192
02463552	36	03420084	140	03766063	138	05020201	75	07322710	125	1000066	193
02464152	36	03422042	140	03766084	138	05316700	125	07322711	125	1000066	194
02622021	150	03422063	140	03768042	138	05316701	125	07616700	126	1000066	195
02630042	132	03422084	140	03768063	138	05316710	125	07616701	126	1001001	78
02630084	132	03426042	140	03768084	138	05316711	125	07616710	126	1001002	78
02640042	132	03426063	140	03770042	138	05322700	125	07616711	126	1001003	78
02640084	132	03426084	140	03770063	138	05322701	125	07622700	126	1001004	78
02650042	132	03428042	140	03770084	138	05322710	125	07622701	126	1001005	78
02650084	132	03428063	140	03772042	138	05322711	125	07622710	126	1001006	78
0280001	123	03428084	140	03772063	138	05616700	126	07622711	126	1001007	78
0280002	123	03430042	133	03772084	138	05616701	126	08010302	74	1001008	78
0280003	123	03430084	133	03776042	138	05616710	126	08020302	75	1001009	78
0280004	123	03440042	133	03776063	138	05616711	126	08316700	125	1001010	78
0280005	123	03440084	133	03776084	138	05622700	126	08316701	125	1001011	78
0280006	123	03450042	133	03778042	138	05622701	126	08316710	125	1001012	78
03230042	133	03450084	133	03778063	138	05622710	126	08316711	125	1001014	38
03230084	133	03600042	141	03778084	138	05622711	126	08322700	125	1001014	40
03240042	133	03600063	141	04010201	74	057	40	08322701	125	1001014	42
03240084	133	03600084	141	04020201	75	05724542	143	08322710	125	1001014	46
03250042	133	03602042	141	04230042	133	05724563	143	08322711	125	1001014	78
03250084	133	03602063	141	04230084	133	05724584	143	08616700	126	1001015	81
03300042	140	03602084	141	04240042	133	05728542	143	08616701	126	1001017	38
03300063	140	03606042	141	04240084	133	05728563	143	08616710	126	1001017	40
03300084	140	03606063	141	04250042	133	05728584	143	08616711	126	1001017	42
03302042	140	03606084	141	04250084	133	05734542	143	08622700	126	1001017	46
03302063	140	03608042	141	04330042	133	05734563	143	08622701	126	1001017	78
03302084	140	03608063	141	04330084	133	05734584	143	08622710	126	1001018	81
03306042	140	03608084	141	04340042	133	06010202	74	08622711	126	1001019	81
03306063	140	03630042	133	04340084	133	06020202	75	09010303	74	1001020	81
03306084	140	03630042	141	04350042	133	06316700	125	09020303	75	1001020	107
03308042	140	03630063	141	04350084	133	06316701	125	BQ002.002.006	40	1001022	124
03308063	140	03630084	133	04430042	133	06316710	125	100006	38	1001023	124
03308084	140	03630084	141	04430084	133	06316711	125	100013	38	1001024	124
03330042	133	03632042	141	04440042	133	06322700	125	110006	38	1001025	83
03330084	133	03632063	141	04440084	133	06322701	125	110013	38	1001026	83
03340042	133	03632084	141	04450042	133	06322710	125	1000007	145	1001027	83
03340084	133	03636042	141	04450084	133	06322711	125	1000009	144	1001044	44

Material Page Table

1001044 to 1004004

Order no	Page	Order no	Page	Order no	Page	Order no	Page	Order no	Page	Order no	Page
1001044	72	1001134	78	1001243	84	1002033	220	1002332	58	1002431	65
1001044	80	1001135	85	1001244	84	1002033	223	1002333	64	1002432	68
1001045	44	1001136	85	1001245	84	1002034	54	1002334	64	1002433	68
1001045	72	1001137	85	1001246	84	1002034	229	1002335	58	1002434	68
1001045	80	1001138	85	1001247	84	1002035	54	1002336	58	1002435	68
1001045	166	1001147	82	1001248	84	1002035	229	1002337	64	1002440	66
1001046	80	1001151	85	1001259	83	1002036	54	1002338	64	1002441	66
1001047	78	1001153	82	1001260	83	1002037	54	1002362	73	1002442	66
1001048	38	1001154	82	1001261	83	1002037	226	1002363	73	1002443	66
1001048	40	1001155	85	1001262	83	1002042	67	1002367	50	1002484	44
1001048	42	1001156	79	1001263	83	1002043	67	1002368	50	1002484	45
1001048	46	1001163	85	1001264	83	1002044	66	1002369	50	1002485	44
1001048	80	1001167	85	1001265	83	1002045	66	1002372	50	1002485	45
1001049	38	1001168	85	1001266	83	1002046	66	1002373	50	1002508	46
1001049	40	1001169	122	1002001	48	1002047	66	1002374	51	1002508	47
1001049	42	1001171	85	1002001	173	1002052	54	1002375	51	1002509	46
1001049	46	1001184	83	1002003	48	1002053	54	1002380	51	1002509	47
1001049	80	1001186	80	1002003	171	1002056	57	1002381	51	1002511	49
1001051	78	1001187	80	1002003	173	1002057	38	1002382	60	1002511	52
1001052	78	1001209	83	1002006	48	1002057	39	1002383	60	1002512	49
1001054	78	1001210	83	1002006	177	1002058	38	1002384	61	1002512	52
1001058	87	1001211	83	1002007	48	1002058	39	1002385	61	1002513	55
1001071	78	1001212	83	1002007	175	1002059	38	1002386	59	1002514	55
1001076	87	1001213	83	1002007	177	1002059	39	1002387	59	1002518	57
1001077	87	1001214	83	1002008	179	1002060	38	1002388	59	1002518	235
1001086	79	1001215	83	1002008	181	1002060	39	1002389	59	1002519	57
1001096	81	1001216	83	1002012	51	1002061	65	1002390	59	1002519	232
1001099	82	1001217	84	1002012	199	1002062	65	1002391	59	1002519	235
1001102	81	1001218	84	1002013	51	1002063	40	1002392	59	1002525	63
1001103	82	1001219	84	1002013	196	1002063	41	1002393	59	1002526	63
1001104	82	1001220	84	1002013	199	1002064	40	1002394	62	1002527	56
1001107	83	1001221	84	1002016	51	1002064	41	1002395	62	1002528	56
1001108	82	1001222	84	1002016	205	1002065	40	1002396	62	1002529	56
1001111	83	1001223	84	1002017	51	1002065	41	1002397	62	1002530	56
1001112	83	1001224	84	1002017	202	1002066	40	1002406	61	1002531	63
1001113	81	1001225	84	1002017	205	1002066	41	1002407	61	1002532	63
1001114	83	1001226	84	1002020	52	1002069	65	1002408	61	1004004	168
1001115	83	1001227	84	1002021	52	1002074	65	1002409	61	1004004	171
1001116	82	1001228	84	1002021	208	1002249	72	1002410	53	1004004	173
1001117	107	1001229	84	1002021	211	1002250	72	1002411	53	1004004	175
1001118	107	1001230	84	1002022	211	1002299	40	1002412	53	1004004	177
1001119	82	1001231	84	1002026	60	1002299	41	1002413	53	1004004	179
1001120	82	1001232	84	1002027	60	1002300	40	1002416	62	1004004	181
1001121	82	1001233	84	1002028	53	1002300	41	1002417	62	1004004	183
1001122	82	1001234	84	1002029	53	1002309	72	1002422	67	1004004	184
1001123	82	1001235	84	1002030	61	1002310	40	1002423	67	1004004	185
1001124	81	1001236	84	1002030	217	1002310	43	1002424	68	1004004	186
1001125	81	1001237	84	1002031	61	1002326	57	1002425	68	1004004	187
1001126	83	1001238	84	1002031	214	1002327	58	1002426	68	1004004	188
1001127	83	1001239	84	1002031	217	1002328	58	1002427	68	1004004	189
1001128	83	1001240	84	1002032	53	1002329	64	1002428	65	1004004	190
1001131	81	1001241	84	1002032	223	1002330	64	1002429	65	1004004	191
1001133	78	1001242	84	1002033	53	1002331	58	1002430	65	1004004	192

Appendix

Material Page Table

1004004 to 1009010

Order no	Page	Order no	Page	Order no	Page	Order no	Page	Order no	Page	Order no	Page
1004004	193	1004011	196	1004023	229	1005001	183	1008015	192	1008038	202
1004004	194	1004011	202	1004023	232	1005001	184	1008015	193	1008038	205
1004004	195	1004011	208	1004023	235	1005001	187	1008015	194	1008038	208
1004004	196	1004011	214	1004025	168	1005001	188	1008015	195	1008038	211
1004004	199	1004011	220	1004026	168	1005001	189	1008015	196	1008038	214
1004004	202	1004011	226	1004028	168	1005001	190	1008015	199	1008038	217
1004004	205	1004011	232	1004034	168	1005001	191	1008015	202	1008038	220
1004004	208	1004012	169	1004040	169	1005001	194	1008015	205	1008038	223
1004004	211	1004014	107	1004041	169	1005001	195	1008015	208	1008038	226
1004004	214	1004014	169	1004042	169	1005002	43	1008015	211	1008038	229
1004004	217	1004015	169	1004057	10	1005002	74	1008015	214	1008038	232
1004004	220	1004015	183	1004057	19	1005002	75	1008015	217	1008038	235
1004004	223	1004015	184	1004078	20	1005002	170	1008015	220	1008040	162
1004004	226	1004015	187	1004095	168	1005002	183	1008015	223	1008041	162
1004004	229	1004015	188	1004096	168	1005002	184	1008015	226	1008042	162
1004004	232	1004015	190	1004185	168	1005002	185	1008015	229	1008045	34
1004004	235	1004015	191	1004226	161	1005002	186	1008015	232	1008045	163
1004005	168	1004015	194	1004226	170	1005002	187	1008015	235	1008046	162
1004005	183	1004015	195	1004227	170	1005002	188	1008016	165	1008047	162
1004005	184	1004020	168	1004229	33	1005002	190	1008017	165	1008048	160
1004005	185	1004023	146	1004229	34	1005002	191	1008033	162	1008049	162
1004005	186	1004023	147	1004229	35	1005002	192	1008034	162	1008050	163
1004005	187	1004023	168	1004229	36	1005002	193	1008037	34	1008051	163
1004005	188	1004023	171	1004230	169	1005002	194	1008037	35	1008052	163
1004005	190	1004023	173	1004231	169	1005002	195	1008037	36	1008053	34
1004005	191	1004023	175	1004240	169	1008001	165	1008037	148	1008054	34
1004005	192	1004023	177	1004241	169	1008002	165	1008037	163	1008074	104
1004005	193	1004023	179	1004242	169	1008003	165	1008038	34	1009001	40
1004005	194	1004023	181	1004245	168	1008007	33	1008038	35	1009001	44
1004005	195	1004023	183	1004251	169	1008007	165	1008038	36	1009001	46
1004006	168	1004023	184	1004260	183	1008008	33	1008038	37	1009002	40
1004008	43	1004023	185	1004260	184	1008008	165	1008038	148	1009002	166
1004008	168	1004023	186	1004260	185	1008009	33	1008038	163	1009003	40
1004009	50	1004023	187	1004260	186	1008009	165	1008038	171	1009004	40
1004009	181	1004023	188	1004260	190	1008010	163	1008038	173	1009004	166
1004011	43	1004023	189	1004260	191	1008011	160	1008038	175	1009005	159
1004011	50	1004023	190	1004260	192	1008013	160	1008038	177	1009006	159
1004011	74	1004023	191	1004260	193	1008014	160	1008038	179	1009008	159
1004011	75	1004023	192	1004262	169	1008015	165	1008038	181	1009009	38
1004011	169	1004023	193	1004266	169	1008015	171	1008038	183	1009009	40
1004011	171	1004023	194	1004272	169	1008015	173	1008038	184	1009009	44
1004011	175	1004023	195	1004273	169	1008015	175	1008038	185	1009009	46
1004011	179	1004023	196	1004277	169	1008015	177	1008038	186	1009010	70
1004011	181	1004023	199	1004279	168	1008015	179	1008038	187	1009010	90
1004011	183	1004023	202	1004310	168	1008015	181	1008038	188	1009010	196
1004011	184	1004023	205	1004333	168	1008015	183	1008038	190	1009010	199
1004011	185	1004023	208	1004336	169	1008015	184	1008038	191	1009010	202
1004011	186	1004023	211	1004337	169	1008015	185	1008038	192	1009010	205
1004011	189	1004023	214	1004339	168	1008015	186	1008038	193	1009010	208
1004011	190	1004023	217	1004352	168	1008015	187	1008038	194	1009010	211
1004011	191	1004023	220	1005001	43	1008015	188	1008038	195	1009010	214
1004011	192	1004023	223	1005001	166	1008015	190	1008038	196	1009010	217
1004011	193	1004023	226	1005001	170	1008015	191	1008038	199	1009010	220

Appendix

Material Page Table

1009010 to 13426063

Order no	Page	Order no	Page	Order no	Page	Order no	Page	Order no	Page	Order no	Page
1009010	223	1014002	195	1015001	189	1030045	144	1037001	44	12316711	125
1009010	226	1014002	196	1015001	190	1030046	144	1037001	46	12322700	125
1009010	229	1014002	199	1015001	191	1030047	144	1037001	157	12322701	125
1009010	232	1014002	202	1015001	192	1030048	145	1037002	157	12322710	125
1009010	235	1014002	205	1015001	193	1030050	145	1037005	156	12322711	125
1009011	70	1014002	208	1015004	50	1030051	145	1037011	44	12616700	126
1009011	90	1014002	211	1015004	171	1030052	145	1037011	46	12616701	126
1009014	166	1014002	214	1015004	175	1030054	145	1037011	157	12616710	126
1009015	166	1014002	217	1015004	179	1030055	145	1037012	157	12616711	126
1009016	166	1014002	220	1015004	196	1030056	145	1043008	103	12622700	126
1010001	89	1014002	223	1015004	202	1030057	145	1043009	103	12622701	126
1010001	107	1014002	226	1015004	208	1030058	145	1043010	103	12622710	126
1010003	107	1014002	229	1015004	214	1030059	145	1043011	103	12622711	126
1010003	160	1014002	232	1015004	220	1030064	145	1043012	103	13010404	74
1010004	160	1014002	235	1015004	226	1030069	105	1043013	103	13020404	75
1010010	88	1014003	170	1015004	232	1030070	105	1043014	103	13300042	140
1011003	158	1014003	171	1015005	183	1030071	105	1043015	103	13300063	140
1011005	158	1014003	173	1015005	184	1030072	105	1043016	103	13300084	140
1011010	158	1014003	175	1015005	185	1030073	105	1043017	103	13302042	140
1011012	158	1014003	177	1015005	186	1030075	76	1048001	37	13302063	140
1011013	158	1014003	179	1015005	189	1030076	76	1048002	37	13302084	140
1011013	161	1014003	181	1015005	190	1030077	76	10010303	74	13306042	140
1011017	158	1014003	183	1015005	191	1030078	76	10017070	74	13306063	140
1011019	158	1014003	184	1015005	192	1030083	76	10020303	75	13306084	140
1011020	158	1014003	185	1015005	193	1030085	76	10027070	75	13308042	140
1011042	161	1014003	186	1015007	158	1030086	76	10290002	146	13308063	140
1011116	158	1014003	187	1015007	170	1030087	76	10290008	147	13308084	140
1012001	159	1014003	188	1015015	184	1030088	76	10290009	147	13410042	140
1012002	159	1014003	189	1015015	186	1030089	76	10290010	147	13410063	140
1013001	160	1014003	190	1015015	191	1030090	76	10290011	146	13410084	140
1013006	164	1014003	191	1015015	193	1030091	76	10316700	125	13412042	140
1013007	161	1014003	192	1015016	183	1030092	76	10316701	125	13412063	140
1013008	161	1014003	193	1015016	184	1030093	76	10316710	125	13412084	140
1013009	161	1014003	194	1015016	187	1030094	76	10316711	125	13416042	140
1014002	170	1014003	195	1015016	188	1030095	76	10322700	125	13416063	140
1014002	171	1014003	196	1015016	189	1030096	76	10322701	125	13416084	140
1014002	173	1014003	199	1015016	190	1030097	76	10322710	125	13418042	140
1014002	175	1014003	202	1015016	191	1030098	76	10322711	125	13418063	140
1014002	177	1014003	205	1015016	194	1030099	76	10616700	126	13418084	140
1014002	179	1014003	208	1015016	195	1030100	76	10616701	126	13420042	140
1014002	181	1014003	211	1015018	122	1030101	76	10616710	126	13420063	140
1014002	183	1014003	214	1015019	122	1030102	76	10616711	126	13420084	140
1014002	184	1014003	217	1015022	122	1030103	76	10622700	126	13422042	140
1014002	185	1014003	220	1015024	122	1030104	76	10622701	126	13422063	140
1014002	186	1014003	223	1015026	122	1030105	76	10622710	126	13422084	140
1014002	187	1014003	226	1023004	146	1030106	76	10622711	126	13422450	3
1014002	188	1014003	229	1025010	48	1031020	70	11010303	74	13422451	3
1014002	189	1014003	232	1025010	50	1031020	71	11020303	75	13422850	3
1014002	190	1014003	235	1025010	76	1031023	71	12010404	74	13422851	3
1014002	191	1015001	183	1030030	144	1033007	167	12020404	75	13423450	3
1014002	192	1015001	184	1030042	144	1033008	167	12316700	125	13423451	3
1014002	193	1015001	185	1030043	144	1033009	167	12316701	125	13426042	140
1014002	194	1015001	186	1030044	144	1033010	167	12316710	125	13426063	140

Appendix

Material Page Table

13426084 to 30401012

Order no	Page	Order no	Page	Order no	Page	Order no	Page	Order no	Page	Order no	Page
13426084	140	13776063	138	16422850	4	23306063	140	23632450	5	24632851	5
13428042	140	13776084	138	16422851	4	23306084	140	23632451	5	24633450	5
13428063	140	13778042	138	16423450	4	23308042	140	23632850	5	24633451	5
13428084	140	13778063	138	16423451	4	23308063	140	23632851	5	24842450	5
13600042	141	13778084	138	16632450	4	23308084	140	23633450	5	24842451	5
13600063	141	13842450	3	16632451	4	23410042	140	23633451	5	24842850	5
13600084	141	13842451	3	16632850	4	23410063	140	23636042	141	24842851	5
13602042	141	13842850	3	16632851	4	23410084	140	23636063	141	24843450	5
13602063	141	13842851	3	16633450	4	23412042	140	23636084	141	24843451	5
13602084	141	13843450	3	16633451	4	23412063	140	23638042	141	25010808	74
13606042	141	13843451	3	16842450	4	23412084	140	23638063	141	25020808	75
13606063	141	14010505	74	16842451	4	23416042	140	23638084	141	26010909	74
13606084	141	14020505	75	16842850	4	23416063	140	23760042	138	26020909	75
13608042	141	14316700	125	16842851	4	23416084	140	23760063	138	26422450	6
13608063	141	14316701	125	16843450	4	23418042	140	23760084	138	26422451	6
13608084	141	14316710	125	16843451	4	23418063	140	23762042	138	26422850	6
13630042	141	14316711	125	17010606	74	23418084	140	23762063	138	26422851	6
13630063	141	14322700	125	17020606	75	23420042	140	23762084	138	26423450	6
13630084	141	14322701	125	18010606	74	23420063	140	23766042	138	26423451	6
13632042	141	14322710	125	18020606	75	23420084	140	23766063	138	26632450	6
13632063	141	14322711	125	19010606	74	23422042	140	23766084	138	26632451	6
13632084	141	14422450	3	19020606	75	23422063	140	23768042	138	26632850	6
13632450	3	14422451	3	20010707	74	23422084	140	23768063	138	26632851	6
13632451	3	14422850	3	20020707	75	23422450	5	23768084	138	26633450	6
13632850	3	14422851	3	21010707	74	23422451	5	23770042	138	26633451	6
13632851	3	14423450	3	21020707	75	23422850	5	23770063	138	26842450	6
13633450	3	14423451	3	21316700	125	23422851	5	23770084	138	26842451	6
13633451	3	14616700	126	21316701	125	23423450	5	23772042	138	26842850	6
13636042	141	14616701	126	21316710	125	23423451	5	23772063	138	26842851	6
13636063	141	14616710	126	21316711	125	23426042	140	23772084	138	26843450	6
13636084	141	14616711	126	21322700	125	23426063	140	23776042	138	26843451	6
13638042	141	14622700	126	21322701	125	23426084	140	23776063	138	27010909	74
13638063	141	14622701	126	21322710	125	23428042	140	23776084	138	27020909	75
13638084	141	14622710	126	21322711	125	23428063	140	23778042	138	28011010	74
13760042	138	14622711	126	21616700	126	23428084	140	23778063	138	28021010	75
13760063	138	14632450	3	21616701	126	23600042	141	23778084	138	28316700	125
13760084	138	14632451	3	21616710	126	23600063	141	23842450	5	28316701	125
13762042	138	14632850	3	21616711	126	23600084	141	23842451	5	28316710	125
13762063	138	14632851	3	21622700	126	23602042	141	23842850	5	28316711	125
13762084	138	14633450	3	21622701	126	23602063	141	23842851	5	28322700	125
13766042	138	14633451	3	21622710	126	23602084	141	23843450	5	28322701	125
13766063	138	14842450	3	21622711	126	23606042	141	23843451	5	28322710	125
13766084	138	14842451	3	22010707	74	23606063	141	24010808	74	28322711	125
13768042	138	14842850	3	22020707	75	23606084	141	24020808	75	28616700	126
13768063	138	14842851	3	23010808	74	23608042	141	24422450	5	28616701	126
13768084	138	14843450	3	23020808	75	23608063	141	24422451	5	28616710	126
13770042	138	14843451	3	23300042	140	23608084	141	24422850	5	28616711	126
13770063	138	15010505	74	23300063	140	23630042	141	24422851	5	28622700	126
13770084	138	15020505	75	23300084	140	23630063	141	24423450	5	28622701	126
13772042	138	16010505	74	23302042	140	23630084	141	24423451	5	28622710	126
13772063	138	16020505	75	23302063	140	23632042	141	24632450	5	28622711	126
13772084	138	16422450	4	23302084	140	23632063	141	24632451	5	30401011	185
13776042	138	16422451	4	23306042	140	23632084	141	24632850	5	30401012	187

Material Page Table

30401021 to 33422084

Order no	Page	Order no	Page	Order no	Page	Order no	Page	Order no	Page	Order no	Page
30401021	185	30602042	194	30802031	192	31022701	110	31246730	119	32816701	110
30401022	187	30616700	111	30802032	194	31022710	111	31246731	118	32816710	111
30401031	185	30616701	110	30802041	192	31022711	110	31416700	111	32816711	110
30401032	187	30616710	111	30802042	194	31022720	115	31416701	110	32816720	115
30401041	185	30616711	110	30816700	111	31022721	114	31416710	111	32816721	114
30401042	187	30622700	111	30816701	110	31022730	115	31416711	110	32816730	115
30402011	192	30622701	110	30816710	111	31022731	114	31416720	115	32816731	114
30402012	194	30622710	111	30816711	110	31032730	119	31416721	114	32822700	111
30402021	192	30622711	110	30816720	115	31032731	118	31416730	115	32822701	110
30402022	194	30701011	185	30816721	114	31036730	119	31416731	114	32822710	111
30402031	192	30701012	187	30816730	115	31036731	118	31422700	111	32822711	110
30402032	194	30701021	185	30816731	114	31042730	119	31422701	110	32822720	115
30402041	192	30701022	187	30822700	111	31042731	118	31422710	111	32822721	114
30402042	194	30701031	185	30822701	110	31046730	119	31422711	110	32822730	115
30501011	185	30701032	187	30822710	111	31046731	118	31422720	115	32822731	114
30501012	187	30701041	185	30822711	110	31201011	185	31422721	114	32832730	119
30501021	185	30701042	187	30822720	115	31201012	187	31422730	115	32832731	118
30501022	187	30702011	192	30822721	114	31201021	185	31422731	114	32836730	119
30501031	185	30702012	194	30822730	115	31201022	187	31432730	119	32836731	118
30501032	187	30702021	192	30822731	114	31201031	185	31432731	118	32842730	119
30501041	185	30702022	194	30832730	119	31201032	187	31436730	119	32842731	118
30501042	187	30702031	192	30832731	118	31201041	185	31436731	118	32846730	119
30502011	192	30702032	194	30836730	119	31201042	187	31442730	119	32846731	118
30502012	194	30702041	192	30836731	118	31202011	192	31442731	118	33300042	140
30502021	192	30702042	194	30842730	119	31202012	194	31446730	119	33300063	140
30502022	194	30716700	111	30842731	118	31202021	192	31446731	118	33300084	140
30502031	192	30716701	110	30846730	119	31202022	194	31604202	123	33302042	140
30502032	194	30716710	111	30846731	118	31202031	192	32116700	111	33302063	140
30502041	192	30716711	110	31001011	185	31202032	194	32116701	110	33302084	140
30502042	194	30716720	115	31001012	187	31202041	192	32116710	111	33306042	140
30516700	111	30716721	114	31001021	185	31202042	194	32116711	110	33306063	140
30516701	110	30716730	115	31001022	187	31216700	111	32116720	115	33306084	140
30516710	111	30716731	114	31001031	185	31216701	110	32116721	114	33308042	140
30516711	110	30722700	111	31001032	187	31216710	111	32116730	115	33308063	140
30522700	111	30722701	110	31001041	185	31216711	110	32116731	114	33308084	140
30522701	110	30722710	111	31001042	187	31216720	115	32122700	111	33410042	140
30522710	111	30722711	110	31002011	192	31216721	114	32122701	110	33410063	140
30522711	110	30722720	115	31002012	194	31216730	115	32122710	111	33410084	140
30601011	185	30722721	114	31002021	192	31216731	114	32122711	110	33412042	140
30601012	187	30722730	115	31002022	194	31222700	111	32122720	115	33412063	140
30601021	185	30722731	114	31002031	192	31222701	110	32122721	114	33412084	140
30601022	187	30801011	185	31002032	194	31222710	111	32122730	115	33416042	140
30601031	185	30801012	187	31002041	192	31222711	110	32122731	114	33416063	140
30601032	187	30801021	185	31002042	194	31222720	115	32132730	119	33416084	140
30601041	185	30801022	187	31016700	111	31222721	114	32132731	118	33418042	140
30601042	187	30801031	185	31016701	110	31222730	115	32136730	119	33418063	140
30602011	192	30801032	187	31016710	111	31222731	114	32136731	118	33418084	140
30602012	194	30801041	185	31016711	110	31232730	119	32142730	119	33420042	140
30602021	192	30801042	187	31016720	115	31232731	118	32142731	118	33420063	140
30602022	194	30802011	192	31016721	114	31236730	119	32146730	119	33420084	140
30602031	192	30802012	194	31016730	115	31236731	118	32146731	118	33422042	140
30602032	194	30802021	192	31016731	114	31242730	119	32204202	123	33422063	140
30602041	192	30802022	194	31022700	111	31242731	118	32816700	111	33422084	140

Appendix

Material Page Table

33306042 to 60616711

Order no	Page	Order no	Page	Order no	Page	Order no	Page	Order no	Page	Order no	Page
33422450	15	33768084	138	34633450	15	43632851	17	53632950	25	60401042	188
33422451	15	33770042	138	34633451	15	43633450	17	53632951	25	60402011	193
33422850	15	33770063	138	34842450	15	43633451	17	53633550	25	60402012	195
33422851	15	33770084	138	34842451	15	43842450	17	53633551	25	60402021	193
33423450	15	33772042	138	34842850	15	43842451	17	53842350	25	60402022	195
33423451	15	33772063	138	34842851	15	43842850	17	53842351	25	60402031	193
33426042	140	33772084	138	34843450	15	43842851	17	53842950	25	60402032	195
33426063	140	33776042	138	34843451	15	43843450	17	53842951	25	60402041	193
33426084	140	33776063	138	36422450	16	43843451	17	53843550	25	60402042	195
33428042	140	33776084	138	36422451	16	44422450	17	53843551	25	60501011	186
33428063	140	33778042	138	36422850	16	44422451	17	54422350	25	60501012	188
33428084	140	33778063	138	36422851	16	44422850	17	54422351	25	60501021	186
33600042	141	33778084	138	36423450	16	44422851	17	54422950	25	60501022	188
33600063	141	33842450	15	36423451	16	44423450	17	54422951	25	60501031	186
33600084	141	33842451	15	36632450	16	44423451	17	54423550	25	60501032	188
33602042	141	33842850	15	36632451	16	44632450	17	54423551	25	60501041	186
33602063	141	33842851	15	36632850	16	44632451	17	54632350	25	60501042	188
33602084	141	33843450	15	36632851	16	44632850	17	54632351	25	60502011	193
33606042	141	33843451	15	36633450	16	44632851	17	54632950	25	60502012	195
33606063	141	34216700	111	36633451	16	44633450	17	54632951	25	60502021	193
33606084	141	34216701	110	36842450	16	44633451	17	54633550	25	60502022	195
33608042	141	34216710	111	36842451	16	44842450	17	54633551	25	60502031	193
33608063	141	34216711	110	36842850	16	44842451	17	54842350	25	60502032	195
33608084	141	34216720	115	36842851	16	44842850	17	54842351	25	60502041	193
33630042	141	34216721	114	36843450	16	44842851	17	54842950	25	60502042	195
33630063	141	34216730	115	36843451	16	44843450	17	54842951	25	60516700	113
33630084	141	34216731	114	41604212	123	44843451	17	54843550	25	60516701	112
33632042	141	34222700	111	42204213	123	46422450	18	54843551	25	60516710	113
33632063	141	34222701	110	42316700	125	46422451	18	56422350	26	60516711	112
33632084	141	34222710	111	42316701	125	46422850	18	56422351	26	60522700	113
33632450	15	34222711	110	42316710	125	46422851	18	56422950	26	60522701	112
33632451	15	34222720	115	42316711	125	46423450	18	56422951	26	60522710	113
33632850	15	34222721	114	42322700	125	46423451	18	56423550	26	60522711	112
33632851	15	34222730	115	42322701	125	46632450	18	56423551	26	60601011	186
33633450	15	34222731	114	42322710	125	46632451	18	56632350	26	60601012	188
33633451	15	34232730	119	42322711	125	46632850	18	56632351	26	60601021	186
33636042	141	34232731	118	42616700	126	46632851	18	56632950	26	60601022	188
33636063	141	34236730	119	42616701	126	46633450	18	56632951	26	60601031	186
33636084	141	34236731	118	42616710	126	46633451	18	56633550	26	60601032	188
33638042	141	34242730	119	42616711	126	46842450	18	56633551	26	60601041	186
33638063	141	34242731	118	42622700	126	46842451	18	56842350	26	60601042	188
33638084	141	34246730	119	42622701	126	46842850	18	56842351	26	60602011	193
33760042	138	34246731	118	42622710	126	46842851	18	56842950	26	60602012	195
33760063	138	34422450	15	42622711	126	46843450	18	56842951	26	60602021	193
33760084	138	34422451	15	43422450	17	46843451	18	56843550	26	60602022	195
33762042	138	34422850	15	43422451	17	53422350	25	56843551	26	60602031	193
33762063	138	34422851	15	43422850	17	53422351	25	60401011	186	60602032	195
33762084	138	34423450	15	43422851	17	53422950	25	60401012	188	60602041	193
33766042	138	34423451	15	43423450	17	53422951	25	60401021	186	60602042	195
33766063	138	34632450	15	43423451	17	53423550	25	60401022	188	60616700	113
33766084	138	34632451	15	43632450	17	53423551	25	60401031	186	60616701	112
33768042	138	34632850	15	43632451	17	53632350	25	60401032	188	60616710	113
33768063	138	34632851	15	43632850	17	53632351	25	60401041	186	60616711	112

Material Page Table

60622700 to 72842801

Order no	Page	Order no	Page	Order no	Page	Order no	Page	Order no	Page	Order no	Page
60622700	113	60816701	112	61022730	116	61416711	112	62816730	117	64232731	120
60622701	112	60816710	113	61022731	121	61416720	117	62816731	116	64236730	121
60622710	113	60816711	112	61032730	120	61416721	116	62822700	113	64236731	120
60622711	112	60816720	117	61032731	121	61416730	117	62822701	112	64242730	121
60701011	186	60816721	116	61036730	120	61416731	116	62822710	113	64242731	120
60701012	188	60816730	117	61036731	121	61422700	113	62822711	112	64246730	121
60701021	186	60816731	116	61042730	120	61422701	112	62822720	117	64246731	120
60701022	188	60822700	113	61042731	121	61422710	113	62822721	116	64422350	27
60701031	186	60822701	112	61046730	120	61422711	112	62822730	117	64422351	27
60701032	188	60822710	113	61046731	186	61422720	117	62822731	116	64422950	27
60701041	186	60822711	112	61201011	188	61422721	116	62832730	121	64422951	27
60701042	188	60822720	117	61201012	186	61422730	117	62832731	120	64423550	27
60702011	193	60822721	116	61201021	188	61422731	116	62836730	121	64423551	27
60702012	195	60822730	117	61201022	186	61432730	121	62836731	120	64632350	27
60702021	193	60822731	116	61201031	188	61432731	120	62842730	121	64632351	27
60702022	195	60832730	121	61201032	186	61436730	121	62842731	120	64632950	27
60702031	193	60832731	120	61201041	188	61436731	120	62846730	121	64632951	27
60702032	195	60836730	121	61201042	193	61442730	121	62846731	120	64633550	27
60702041	193	60836731	120	61202011	195	61442731	120	63422350	27	64633551	27
60702042	195	60842730	121	61202012	193	61446730	121	63422351	27	64842350	27
60716700	113	60842731	120	61202021	195	61446731	120	63422950	27	64842351	27
60716701	112	60846730	121	61202022	193	61604212	123	63422951	27	64842950	27
60716710	113	60846731	120	61202031	195	62116700	113	63423550	27	64842951	27
60716711	112	61001011	186	61202032	193	62116701	112	63423551	27	64843550	27
60716720	117	61001012	188	61202041	195	62116710	113	63632350	27	64843551	27
60716721	116	61001021	186	61202042	113	62116711	112	63632351	27	66422350	28
60716730	117	61001022	188	61216700	112	62116720	117	63632950	27	66422351	28
60716731	116	61001031	186	61216701	113	62116721	116	63632951	27	66422950	28
60722700	113	61001032	188	61216710	112	62116730	117	63633550	27	66422951	28
60722701	112	61001041	186	61216711	117	62116731	116	63633551	27	66423550	28
60722710	113	61001042	188	61216720	116	62122700	113	63842350	27	66423551	28
60722711	112	61002011	193	61216721	117	62122701	112	63842351	27	66632350	28
60722720	117	61002012	195	61216730	116	62122710	113	63842950	27	66632351	28
60722721	116	61002021	193	61216731	113	62122711	112	63842951	27	66632950	28
60722730	117	61002022	195	61222700	112	62122720	117	63843550	27	66632951	28
60722731	116	61002031	193	61222701	113	62122721	116	63843551	27	66633550	28
60801011	186	61002032	195	61222710	112	62122730	117	64216700	113	66633551	28
60801012	188	61002041	193	61222711	117	62122731	116	64216701	112	66842350	28
60801021	186	61002042	195	61222720	116	62132730	121	64216710	113	66842351	28
60801022	188	61016700	113	61222721	117	62132731	120	64216711	112	66842950	28
60801031	186	61016701	112	61222730	116	62136730	121	64216720	117	66842951	28
60801032	188	61016710	113	61222731	121	62136731	120	64216721	116	66843550	28
60801041	186	61016711	112	61232730	120	62142730	121	64216730	117	66843551	28
60801042	188	61016720	117	61232731	121	62142731	120	64216731	116	71842200	93
60802011	193	61016721	116	61236730	120	62146730	121	64222700	113	71842201	93
60802012	195	61016730	117	61236731	121	62146731	120	64222701	112	71842800	93
60802021	193	61016731	116	61242730	120	62204213	123	64222710	113	71842801	93
60802022	195	61022700	113	61242731	121	62816700	113	64222711	112	71843400	93
60802031	193	61022701	112	61246730	120	62816701	112	64222720	117	71843401	93
60802032	195	61022710	113	61246731	113	62816710	113	64222721	116	72842200	93
60802041	193	61022711	112	61416700	112	62816711	112	64222730	117	72842201	93
60802042	195	61022720	117	61416701	113	62816720	117	64222731	116	72842800	93
60816700	113	61022721	116	61416710		62816721	116	64232730	121	72842801	93

Appendix

Material Page Table

72843400 to 160502340

Order no	Page
72843400	93
72843401	93
73842800	94
73842801	94
73843400	94
73843401	94
73844000	94
73844001	94
73844600	94
73844601	94
74842800	94
74842801	94
74843400	94
74843401	94
74844000	94
74844001	94
74844600	94
74844601	94
75844600	94
75844601	94
83842353	108
83842354	109
83843201	106
83843202	107
86842353	108
86842354	109
86843201	106
86843202	107
130400100	197
130400110	197
130400200	203
130400210	203
130400400	209
130400410	209
130400600	215
130400610	215
130400700	221
130400710	221
130400800	227
130400810	227
130402130	172
130402140	172
130402230	176
130402240	176
130402330	180
130402340	180
130404630	233
130404640	233
130410100	198
130410110	198
130410200	204
130410210	204
130410400	210

Order no	Page
130410410	210
130410600	216
130410610	216
130410700	222
130410710	222
130410800	228
130410810	228
130414630	234
130414640	234
130500100	197
130500110	197
130500200	203
130500210	203
130500400	209
130500410	209
130500600	215
130500610	215
130500700	221
130500710	221
130500800	227
130500810	227
130502130	172
130502140	172
130502230	176
130502240	176
130502330	180
130502340	180
130504630	233
130504640	233
130510100	198
130510110	198
130510200	204
130510210	204
130510400	210
130510410	210
130510600	216
130510610	216
130510700	222
130510710	222
130510800	228
130510810	228
130514630	234
130514640	234
130600100	197
130600110	197
130600200	203
130600210	203
130600400	209
130600410	209
130600600	215
130600610	215
130600700	221
130600710	221

Order no	Page
130600800	227
130600810	227
130602130	172
130602140	172
130602230	176
130602240	176
130602330	180
130602340	180
130604630	233
130604640	233
130610100	198
130610110	198
130610200	204
130610210	204
130610400	210
130610410	210
130610600	216
130610610	216
130610700	222
130610710	222
130610800	228
130610810	228
130614630	234
130614640	234
130700100	197
130700110	197
130700200	203
130700210	203
130700400	209
130700410	209
130700600	215
130700610	215
130700700	221
130700710	221
130700800	227
130700810	227
130702130	172
130702140	172
130702230	176
130702240	176
130702330	180
130702340	180
130704630	233
130704640	233
130710100	198
130710110	198
130710200	204
130710210	204
130710400	210
130710410	210
130710600	216
130710610	216
130710700	222

Order no	Page
130710710	222
130710800	228
130710810	228
130714630	234
130714640	234
130800100	197
130800110	197
130800200	203
130800210	203
130800400	209
130800410	209
130800600	215
130800610	215
130800700	221
130800710	221
130800800	227
130800810	227
130802130	172
130802140	172
130802230	176
130802240	176
130802330	180
130802340	180
130804640	233
130806430	233
130810100	198
130810110	198
130810200	204
130810210	204
130810400	210
130810410	210
130810600	216
130810610	216
130810700	222
130810710	222
130810800	228
130810810	228
130814630	234
130814640	234
131000100	197
131000110	197
131000200	203
131000210	203
131000400	209
131000410	209
131000600	215
131000610	215
131000700	221
131000710	221
131000800	227
131000810	227
131002130	172
131002140	172

Order no	Page
131002230	176
131002240	176
131002330	180
131002340	180
131004630	233
131004640	233
131010100	198
131010110	198
131010200	204
131010210	204
131010400	210
131010410	210
131010600	216
131010610	216
131010700	222
131010710	222
131010800	228
131010810	228
131014630	234
131014640	234
131200100	197
131200110	197
131200200	203
131200210	203
131200400	209
131200410	209
131200600	215
131200610	215
131200700	221
131200710	221
131200800	227
131200810	227
131202130	172
131202140	172
131202230	176
131202240	176
131202330	180
131202340	180
131204630	233
131204640	233
131210100	198
131210110	198
131210200	204
131210210	204
131210400	210
131210410	210
131210600	216
131210610	216
131210700	222
131210710	222
131210800	228
131210810	228
131214630	234

Order no	Page
131214640	234
160400100	200
160400110	200
160400200	206
160400210	206
160400400	212
160400410	212
160400600	218
160400610	218
160400700	224
160400710	224
160400800	230
160400810	230
160402130	174
160402140	174
160402230	178
160402240	178
160402330	182
160402340	182
160404630	236
160404640	236
160410100	201
160410110	201
160410200	207
160410210	207
160410400	213
160410410	213
160410600	219
160410610	219
160410700	225
160410710	225
160410800	231
160410810	231
160414630	237
160414640	237
160500100	200
160500110	200
160500200	206
160500210	206
160500400	212
160500410	212
160500600	218
160500610	218
160500700	224
160500710	224
160500800	230
160500810	230
160502130	174
160502140	174
160502230	178
160502240	178
160502330	182
160502340	182

瑞德科诺 RDEKON

Material Page Table

160504630 to 230710710

Appendix

Material Page Table

230710800 to 261000410

Order no	Page
230710800	228
230710810	228
230714630	234
230714640	234
230800100	197
230800110	197
230800200	203
230800210	203
230800400	209
230800410	209
230800600	215
230800610	215
230800700	221
230800710	221
230800800	227
230800810	227
230802130	172
230802140	172
230802230	176
230802240	176
230802330	180
230802340	180
230804630	233
230804640	233
230810100	198
230810110	198
230810200	204
230810210	204
230810400	210
230810410	210
230810600	216
230810610	216
230810700	222
230810710	222
230810800	228
230810810	228
230814630	234
230814640	234
231000100	197
231000110	197
231000200	203
231000210	203
231000400	209
231000410	209
231000600	215
231000610	215
231000700	221
231000710	221
231000800	227
231000810	227
231002130	172
231002140	172
231002230	176

Order no	Page
231002240	176
231002330	180
231002340	180
231004630	233
231004640	233
231010100	198
231010110	198
231010200	204
231010210	204
231010400	210
231010410	210
231010600	216
231010610	216
231010700	222
231010710	222
231010800	228
231010810	228
231014630	234
231014640	234
231200100	197
231200110	197
231200200	203
231200210	203
231200400	209
231200410	209
231200600	215
231200610	215
231200700	221
231200710	221
231200800	227
231200810	227
231202130	172
231202140	172
231202230	176
231202240	176
231202330	180
231202340	180
231204630	233
231204640	233
231210100	198
231210110	198
231210200	204
231210210	204
231210400	210
231210410	210
231210600	216
231210610	216
231210700	222
231210710	222
231210800	228
231210810	228
231214630	234
231214640	234

Order no	Page
234224504	7
234224514	7
234228504	7
234228514	7
234234504	7
234234514	7
236324504	7
236324514	7
236328504	7
236328514	7
236334504	7
236334514	7
238424504	7
238424514	7
238428504	7
238428514	7
238434504	7
238434514	7
244224504	7
244224514	7
244228504	7
244228514	7
244234504	7
244234514	7
246324504	7
246324514	7
246328504	7
246328514	7
246334504	7
246334514	7
248424504	7
248424514	7
248428504	7
248428514	7
248434504	7
248434514	7
260400100	200
260400110	200
260400200	206
260400210	206
260400400	212
260400410	212
260400600	218
260400610	218
260400700	224
260400710	224
260400800	230
260400810	230
260402130	174
260402140	174
260402230	178
260402240	178
260402330	182

Order no	Page
260402340	182
260404630	236
260404640	236
260410100	201
260410110	201
260410200	207
260410210	207
260410400	213
260410410	213
260410600	219
260410610	219
260410700	225
260410710	225
260410800	231
260410810	231
260414630	237
260414640	237
260500100	200
260500110	200
260500200	206
260500210	206
260500400	212
260500410	212
260500600	218
260500610	218
260500700	224
260500710	224
260500800	230
260500810	230
260502130	174
260502140	174
260502230	178
260502240	178
260502330	182
260502340	182
260504630	236
260504640	236
260510100	201
260510110	201
260510200	207
260510210	207
260510400	213
260510410	213
260510600	219
260510610	219
260510700	225
260510710	225
260510800	231
260510810	231
260514630	237
260514640	237
260600100	200
260600110	200

Order no	Page
260600200	206
260600210	206
260600400	212
260600410	212
260600600	218
260600610	218
260600700	224
260600710	224
260600800	230
260600810	230
260602130	174
260602140	174
260602230	178
260602240	178
260602330	182
260602340	182
260604630	236
260604640	236
260610100	201
260610110	201
260610200	207
260610210	207
260610400	213
260610410	213
260610600	219
260610610	219
260610700	225
260610710	225
260610800	231
260610810	231
260614630	237
260614640	237
260700100	200
260700110	200
260700200	206
260700210	206
260700400	212
260700410	212
260700600	218
260700610	218
260700700	224
260700710	224
260700800	230
260700810	230
260702130	174
260702140	174
260702230	178
260702240	178
260702330	182
260702340	182
260704630	236
260704640	236
260710100	201

Order no	Page
260710110	201
260710200	207
260710210	207
260710400	213
260710410	213
260710600	219
260710610	219
260710700	225
260710710	225
260710800	231
260710810	231
260714630	237
260714640	237
260800100	200
260800110	200
260800200	206
260800210	206
260800400	212
260800410	212
260800600	218
260800610	218
260800700	224
260800710	224
260800800	230
260800810	230
260802130	174
260802140	174
260802230	178
260802240	178
260802330	182
260802340	182
260804600	236
260804640	236
260810100	201
260810110	201
260810200	207
260810210	207
260810400	213
260810410	213
260810600	219
260810610	219
260810700	225
260810710	225
260810800	231
260810810	231
260814600	237
260814640	237
261000100	200
261000110	200
261000200	206
261000210	206
261000400	212
261000410	212

Material Page Table

261000600 to 331214641

Order no	Page	Order no	Page	Order no	Page	Order no	Page	Order no	Page	Order no	Page
261000600	218	261210410	213	330410601	216	330600811	227	330710801	228	331002241	176
261000610	218	261210600	219	330410611	216	330602131	172	330710811	228	331002331	180
261000700	224	261210610	219	330410701	222	330602141	172	330714631	234	331002341	180
261000710	224	261210700	225	330410711	222	330602231	176	330714641	234	331004631	233
261000800	230	261210710	225	330410801	228	330602241	176	330800101	197	331004641	233
261000810	230	261210800	231	330410811	228	330602331	180	330800111	197	331010101	198
261002130	174	261210810	231	330414631	234	330602341	180	330800201	203	331010111	198
261002140	174	261214600	237	330414641	234	330604631	233	330800211	203	331010201	204
261002230	178	261214640	237	330500101	197	330604641	233	330800401	209	331010211	204
261002240	178	264224504	8	330500111	197	330610101	198	330800411	209	331010401	210
261002330	182	264224514	8	330500201	203	330610111	198	330800601	215	331010411	210
261002340	182	264228504	8	330500211	203	330610201	204	330800611	215	331010601	216
261004600	236	264228514	8	330500401	209	330610211	204	330800701	221	331010611	216
261004640	236	264234504	8	330500411	209	330610401	210	330800711	221	331010701	222
261010100	201	264234514	8	330500601	215	330610411	210	330800801	227	331010711	222
261010110	201	266324504	8	330500611	215	330610601	216	330800811	227	331010801	228
261010200	207	266324514	8	330500701	221	330610611	216	330802131	172	331010811	228
261010210	207	266328504	8	330500711	221	330610701	222	330802141	172	331014631	234
261010400	213	266328514	8	330500801	227	330610711	222	330802231	176	331014641	234
261010410	213	266334504	8	330500811	227	330610801	228	330802241	176	331200101	197
261010600	219	266334514	8	330502131	172	330610811	228	330802331	180	331200111	197
261010610	219	268424504	8	330502141	172	330614631	234	330802341	180	331200201	203
261010700	225	268424514	8	330502231	176	330614641	234	330804631	233	331200211	203
261010710	225	268428504	8	330502241	176	330700101	197	330804641	233	331200401	209
261010800	231	268428514	8	330502331	180	330700111	197	330810101	198	331200411	209
261010810	231	268434504	8	330502341	180	330700201	203	330810111	198	331200601	215
261014600	237	268434514	8	330504631	233	330700211	203	330810201	204	331200611	215
261014640	237	330400101	197	330504641	233	330700401	209	330810211	204	331200701	221
261200100	200	330400111	197	330510101	198	330700411	209	330810401	210	331200711	221
261200110	200	330400201	203	330510111	198	330700601	215	330810411	210	331200801	227
261200200	206	330400211	203	330510201	204	330700611	215	330810601	216	331200811	227
261200210	206	330400401	209	330510211	204	330700701	221	330810611	216	331202131	172
261200400	212	330400411	209	330510401	210	330700711	221	330810701	222	331202141	172
261200410	212	330400601	215	330510411	210	330700801	227	330810711	222	331202231	176
261200600	218	330400611	215	330510601	216	330700811	227	330810801	228	331202241	176
261200610	218	330400701	221	330510611	216	330702131	172	330810811	228	331202331	180
261200700	224	330400711	221	330510701	222	330702141	172	330814631	234	331202341	180
261200710	224	330400801	227	330510711	222	330702231	176	330814641	234	331204631	233
261200800	230	330400811	227	330510801	228	330702241	176	331000101	197	331204641	233
261200810	230	330402131	172	330510811	228	330702331	180	331000111	197	331210101	198
261202130	174	330402141	172	330514631	234	330702341	180	331000201	203	331210111	198
261202140	174	330402231	176	330514641	234	330704631	233	331000211	203	331210201	204
261202230	178	330402241	176	330600101	197	330704641	233	331000401	209	331210211	204
261202240	178	330402331	180	330600111	197	330710101	198	331000411	209	331210401	210
261202330	182	330402341	180	330600201	203	330710111	198	331000601	215	331210411	210
261202340	182	330404631	233	330600211	203	330710201	204	331000611	215	331210601	216
261204600	236	330404641	233	330600401	209	330710211	204	331000701	221	331210611	216
261204640	236	330410101	198	330600411	209	330710401	210	331000711	221	331210701	222
261210100	201	330410111	198	330600601	215	330710411	210	331000801	227	331210711	222
261210110	201	330410201	204	330600611	215	330710601	216	331000811	227	331210801	228
261210200	207	330410211	204	330600701	221	330710611	216	331002131	172	331210811	228
261210210	207	330410401	210	330600711	221	330710701	222	331002141	172	331214631	234
261210400	213	330410411	210	330600801	227	330710711	222	331002231	176	331214641	234

Appendix

Material Page Table

360400101 to 948434011

Order no	Page
360400101	200
360400111	200
360400201	206
360400211	206
360400401	212
360400411	212
360400601	218
360400611	218
360400701	224
360400711	224
360400801	230
360400811	230
360402131	174
360402141	174
360402231	178
360402241	178
360402331	182
360402341	182
360404631	236
360404641	236
360410101	201
360410111	201
360410201	207
360410211	207
360410401	213
360410411	213
360410601	219
360410611	219
360410701	225
360410711	225
360410801	231
360410811	231
360414631	237
360414641	237
360500101	200
360500111	200
360500201	206
360500211	206
360500401	212
360500411	212
360500601	218
360500611	218
360500701	224
360500711	224
360500801	230
360500811	230
360502131	174
360502141	174
360502231	178
360502241	178
360502331	182
360502341	182
360504631	236

Order no	Page
360504641	236
360510101	201
360510111	201
360510201	207
360510211	207
360510401	213
360510411	213
360510601	219
360510611	219
360510701	225
360510711	225
360510801	231
360510811	231
360514631	237
360514641	237
360600101	200
360600111	200
360600201	206
360600211	206
360600401	212
360600411	212
360600601	218
360600611	218
360600701	224
360600711	224
360600801	230
360600811	230
360602131	174
360602141	174
360602231	178
360602241	178
360602331	182
360602341	182
360604631	236
360604641	236
360610101	201
360610111	201
360610201	207
360610211	207
360610401	213
360610411	213
360610601	219
360610611	219
360610701	225
360610711	225
360610801	231
360610811	231
360614631	237
360614641	237
360700101	200
360700111	200
360700201	206
360700211	206

Order no	Page
360700401	212
360700411	212
360700601	218
360700611	218
360700701	224
360700711	224
360700801	230
360700811	230
360702131	174
360702141	174
360702231	178
360702241	178
360702331	182
360702341	182
360704631	236
360704641	236
360710101	201
360710111	201
360710201	207
360710211	207
360710401	213
360710411	213
360710601	219
360710611	219
360710701	225
360710711	225
360710801	231
360710811	231
360714631	237
360714641	237
360800101	200
360800111	200
360800201	206
360800211	206
360800401	212
360800411	212
360800601	218
360800611	218
360800701	224
360800711	224
360800801	230
360800811	230
360802131	174
360802141	174
360802231	178
360802241	178
360802331	182
360802341	182
360804601	236
360804641	236
360810101	201
360810111	201
360810201	207

Order no	Page
360810211	207
360810401	213
360810411	213
360810601	219
360810611	219
360810701	225
360810711	225
360810801	231
360810811	231
360814601	237
360814641	237
361000101	200
361000111	200
361000201	206
361000211	206
361000401	212
361000411	212
361000601	218
361000611	218
361000701	224
361000711	224
361000801	230
361000811	230
361002131	174
361002141	174
361002231	178
361002241	178
361002331	182
361002341	182
361004601	236
361004641	236
361010101	201
361010111	201
361010201	207
361010211	207
361010401	213
361010411	213
361010601	219
361010611	219
361010701	225
361010711	225
361010801	231
361010811	231
361014601	237
361014641	237
361200101	200
361200111	200
361200201	206
361200211	206
361200401	212
361200411	212
361200601	218
361200611	218

Order no	Page
361200701	224
361200711	224
361200801	230
361200811	230
361202131	174
361202141	174
361202231	178
361202241	178
361202331	182
361202341	182
361204601	236
361204641	236
361210101	201
361210111	201
361210201	207
361210211	207
361210401	213
361210411	213
361210601	219
361210611	219
361210701	225
361210711	225
361210801	231
361210811	231
361214601	237
361214641	237
718422001	92
718422011	92
718428001	92
718428011	92
718434001	92
718434011	92
728422001	92
728422011	92
728428001	92
728428011	92
728434001	92
728434011	92
738428001	92
738428011	92
738434001	92
738434011	92
738440001	92
738440011	92
738446001	92
738446011	92
748428001	92
748428011	92
748434001	92
748434011	92
748440001	92
748440011	92
748446001	92

Order no	Page
748446011	92
758446001	92
758446011	92
918422001	102
918422011	102
918428001	102
918428011	102
918434001	102
918434011	102
928428001	102
928428011	102
928434001	102
928434011	102
938428001	102
938428011	102
938434001	102
938434011	102
948428001	102
948428011	102
948434001	102
948434011	102